Lutz The Fluid Managers

Jesco

Lutz Drum Pumps and Flow Meters for the Food, Pharmaceutical and Cosmetics Industry

Certified Solutions

NEW: Eccentric Screw Pumps B70V SanitaryPlus

Safety is our Concern

Lutz Pumps and Flow Meters
for the Food, Pharmaceutical and Cosmetics Industry

During food production, raw materials and finished food products come into contact with various objects and materials, and must be suitable for this. This also includes devices and machine parts for commercial food production. These are defined as “food contact materials” and are specified in food product legislation.

Regulation (EC) 1935/2004

Pumps and flow meters in contact with food products are also considered to be food contact materials and are thus subject to strict legal regulations. In accordance with EU Regulation no. 1935/2004, these are to be produced in accordance with good manufacturing practice and may not release substances which pose a hazard to the health, cause unacceptable changes to the food products or impair their odour or taste.
Lutz drum pumps, flow meters and accessories meet the requirements of Regulation (EC) 1935/2004 and bear the “glass and fork” symbol to indicate their suitability for foodstuffs. The associated Regulation (EC) 10/2011 on plastics in contact with foodstuffs lists the migration values of chemicals which may not be exceeded in defined reagent tests.

FDA Approval

The Food and Drug Administration in the USA certifies materials and substances and also defines limit values for extractable substances which must be complied with, as is the case with elastomers for aqueous or fatty food products (21 CFR 177.2600).

USP – U.S. Pharmacopeial Convention

The United States Pharmacopeial Convention, Inc. is a scientific nonprofit organization that sets standards for the identity, quality, and purity of medicines, food ingredients, and dietary supplements manufactured, distributed, and consumed worldwide.
It provides documentary standards and reference materials to help manufacturers, suppliers, and regulators to safeguard the dietary supplement supply, and limit adulterants and contaminants.

3-A Sanitary Standard

Beyond the safety of the materials used, the 3-A Sanitary Standard places stringent design requirements calling for a hygienically flawless and easy-to-clean design. The new Lutz B70V SanitaryPlus pumps consistently meet the requirements for hygienic design and are certified in accordance with the current version of the "3-A Sanitary Standards for Centrifugal and Positive Rotary Pumps" and are thus equipped for the international market.

Lutz B70V SanitaryPlus pumps are consistently designed with manually detachable, threadless connections in areas coming into contact with liquids. They are quick and easy to dismantle for thorough cleaning and disinfection by hand or with tools such as a water stream or cleaning machines. All products covered in the product are easily accessible and visible.

ATEX Directive

Pumps and flow meters from the PURE and Sanitary series are also available in an explosion-proof version in accordance with ATEX Directive 2014/34/EU. They are well-suited for pumping highly flammable liquids in food and beverage production, such as alcohols, essential oils and flavourings, as well as cleaning products and disinfectants used for cleaning purposes.

The Production Range at a Glance

Eccentric Screw Pumps
Lutz B70V SanitaryPlus

- Hygienically designed according to the latest 3-A standards
- Easily accessible and inspectable components
- Thread-free, manually detachable quick connections
- Polished metal surface
- Quick to dismantle, easy to clean
- Also for alcoholic food products, cosmetics and pharmaceuticals and flammable cleaning products
- For liquid foodstuffs and luxury foodstuffs, pharmaceutical substances and cosmetic products

Eccentric Screw Pumps Lutz B70V SanitaryPlus
Page 4-15

Suitable Accessories
Page 48-53

Pumps and Flow Meters in
PURE Version

- Physiologically safe type
- High surface quality
- Food-safe connections
- Also for alcoholic food products, cosmetics and pharmaceuticals and flammable cleaning products

Pumps and Flow Meters in Pure Version
Page 16-47

Suitable Accessories
Page 54-59

Lutz B70V SanitaryPlus

Designed according to the latest standards for high demands of the food-, pharmaceutical and cosmetics industry

When using hygienic pumps, the operator expects besides a high system availability and low maintenance requirement an absolutely perfect hygienic and easy to clean design. The B70V SanitaryPlus here sets new standards with its one-piece joint-free drive shaft and consistently without threads in the hydraulic area. Only a few components reduce the assembly and dismantling times as well as the cleaning effort for approx. 80%.

Our commitment:
To satisfy the high criteria and demands set by standards

Hygienic aspect:

Consequently realized

The new eccentric screw pump Lutz B70V SanitaryPlus was developed and designed for pumping liquid foodstuffs, pharmaceutical agents and cosmetic products from different vessels and containers. This new development strictly meets the constructive requirements of the hygienic design and is certified and approved according to the latest “3-A Sanitary Standards”.

Benefits of the Lutz B70V SanitaryPlus

- No-thread-design in the hydraulic area
- One-piece drive shaft for perfect hygiene
- Long operating times due to contamination-proof and sterile pump design
- Delivery volume proportional to speed
- Temporary reversible conveying direction
- Continuous and low pulsation pumping, nearly independent from pressure- and viscosity fluctuations
- Stable suction- and pressure capacities
- Service-friendly
- Housing design, free of dead space for good flow properties
- Wetted surfaces with a polished finish prevent the accumulation of liquid and facilitate the cleaning

Versatile and variable:

With a flow rate of 12 to 75 l/min and an operating pressure of max. 10 bar, the Lutz B70V SanitaryPlus hygienic pump is suitable for pumping thin-bodied to highly viscous media.

The chosen immersion depth and the small immersion tube diameter ensure that drums, IBC containers and other commercially available containers are emptied safely and almost completely without residue from the top.

Lutz Eccentric Screw Pumps

Characteristics and Construction

All areas coming into contact with the liquid being pumped are equipped with manually detachable, non-threaded connections. The design is almost free of dead space, thus microbiological problems caused by germs and bacteria are practically impossible.

Quick cleaning
For a fast and thorough cleaning and disinfection by hand or mechanically by means of water jets or cleaning machines, the Lutz B70V SanitaryPlus can be quickly and easily dismantled. All parts coming into contact with the liquid are easy accessible for inspection and service. This pump is a solution for application cases where the use of a CIP pump is technically impossible.

All parts coming into contact with the product are made of resistant stainless steel (1.4404/1.4462/1.4571), 3-A/FDA compliant plastics (PTFE) and elastomers (EPDM).

See the video now!

Lutz B70V SanitaryPlus

Just a few components – minimum wear and fast to clean

Up to **80%** faster assembly/ disassembly due to just a few components!

4 Improvement of anti-twist protection

Easy and fault-free assembly of the pump without special tools

5 Housing design free of dead space

Microbiological problems caused by germs and bacteria are therefore practically impossible

High application possibility

The pump covers a wide range of applications in the Food- and Pharma-Industry due to the certification.
The user-friendly design and the easy cleaning make the pump very interesting for the chemical industry where requirements of the applications often change and therefore an easy cleaning is required.

1 Smooth surface

Fast to clean (less than Ra 0,8 at product contacted surfaces) and thus protection of bacterial contamination

2 Improved stator fixing

Easy assembly and change of the stator with locking pin and anti-twist protection

3 Tri-Clamp connections

Hygienic and user-friendly Tri-Clamp connections acc. to DIN 32676 for easy assembly

6 No-Thread-Design

One-piece drive shaft for perfect hygiene

Function

An impulse transmitter transfers magnetic impulses of the rotating motor shaft contact-free to the impulse sensor. The measured impulses are evaluated in the Lutz operating unit BE10 and appear on the display by means of the pre-determined calibration factor as transferred flow quantity.

Hygienic and without wear:

Contact-free flow measurement

For the Lutz eccentric screw pumps a lifting device with integrated impulse sensor for indirect flow measurement was developed. The contact-free mode of measurement is very interesting for hygienic applications in the food-, pharmaceutical- and cosmetics industry, as well as for industrial applications with viscous, adhesive and solid containing liquids.

The time-consuming cleaning process of the flow meter system is not necessary and as experience has shown, conventional volumetric flow meters quickly come in these circumstances to their limit, while other measuring methods are often very complex and/or are not suitable for mobile use.

The contact-free, indirect mode of measurement with impulse sensor from Lutz is a hygienic, wear-free and reliable option without direct contact with the liquid being pumped.

Features and Benefits

- Compact and easy to handle unit for maximum mobility
- All live-/data elements on the motor-/lifting-device unit
- Pump tube can be detached from motor-/lifting-device with a quick-action coupling
- Pump tube without electronic components enables a thorough cleaning and disinfection also by means of water jets or in cleaning machines
- Easy handling and control with the Lutz operating unit with touch screen display and menu-navigation in plain text
- Can be combined with relay module RM10 and other modules of the Lutz flow meter programme

Order instructions for contact-free flow measurement

Page 60-61

Lutz®
The Fluid Managers
JESCO®

Lutz Eccentric Screw Pumps

B70V-H-SR SanitaryPlus 12.1, 25.1, 50.1

Product detail

Pump tube		B70V-H-SR SanitaryPlus		
Size		**12.1**	**25.1**	**50.1**
Seal Mechanical seal	(MS)	MS	MS	MS
Delivery rate*	up to l/min.	12	25	50
Delivery head*	up to bar	6	8	8
Temp. of medium	up to °C	100	100	100
Material outer tube		1.4404	1.4404	1.4404
Immersion tube diameter	mm	54	54	54
Pressure joint	Tri-Clamp	DN 50	DN 50	DN 50
Weight	kg	8	8	8
Length**	mm	1100	1100	1100
Stator EPDM Seal EPDM	Order No.	**–**	**–**	**0174-548**
Stator PTFE Seal FPM	Order No.	**0174-094** ●	**0174-194** ●	**0174-594** ●
Stator PTFE Seal EPDM	Order No.	**0174-044** ●	**0174-244** ●	**0174-544** ●

* Determined with water at 20 °C, three-phase motor (900 rpm)
** The lenght complies approx. to dimension C in the dimension table. Special length on request

● Explosion proof eccentric screw pump approved category 1 / 2 (acc. to ATEX)
for pumping flammable liquids of the explosion group IIB (B70V-H) and temperature class T4 at 40 °C ambient temperature or temperature class T3 at 60 °C ambient temperature

Choice of motors

Universal motors non-ex. proof	MI 4	MI 4-E	MA II 3	MA II 5	MA II 7
Type Protection type/Weight	500 W, 230 V IP 24 2.8 kg without speed controller	500 W, 230 V IP 24 2.8 kg with speed controller	460 W, 230 V IP 54 4.6 kg	575 W, 230 V IP 54 5.4 kg	795 W, 230 V IP 54 6.6 kg
Order No. (without low-voltage release)	**0030-000**	**0030-001**	**0060-000**	**0060-001**	**0060-002**
Order No. (with low-voltage release)	**–**	**–**	**0060-008**	**0060-009**	**0060-010**

Universal motors ex. proof	ME II 3	ME II 5	ME II 7	ME II 8
Type Protection type/Weight	460 W, 230 V IP 54 5.5 kg	580 W, 230 V IP 54 6.3 kg	795 W, 230 V IP 54 7.5 kg	930 W, 230 V IP 54 8 kg
Order No. (with low-voltage release)	**0050-000**	**0050-001**	**0050-002**	**0050-042**
Order No. (without low-voltage release)	**0050-016**	**0050-017**	**0050-018**	**0050-041**

Compressed air motors	MD1xL	MD2xL
Type	1000 W	1000 W
Operating pressure	6 bar	6 bar
Weight	1.0 kg	1.4 kg
		infinitely variable speed
Order No.	**0004-725**	**0004-735**

For sticky and hardening liquids please contact our Lutz head office to select the suitable pump.

B70V-H-SR SanitaryPlus 12.1, 25.1 and 50.1

for viscosities from 1 - 100,000 mPas (Compressed air motors)
1 - 30,000 mPas (Universal motors)

Materials (coming into contact with the pumped medium):

Version:	B70V-H-SR SanitaryPlus 12.1/25.1/50.1
Housing:	SS (1.4404)
Rotor/Shaft:	SS (1.4571, 1.4462)
Seals:	EPDM, FPM
Mechanical seal:	SiC/carbon/EPDM (FPM), optional SiC/SiC/EPDM (FPM)
Stator material:	PTFE, EPDM (Size 50.1)

Two compressed air motors for almost any requirement

Motor: MD1xL / MD2xL

- High performance class up to 1000 watts
- High viscosity up to 100,000 mPas
- Applicable oil-free

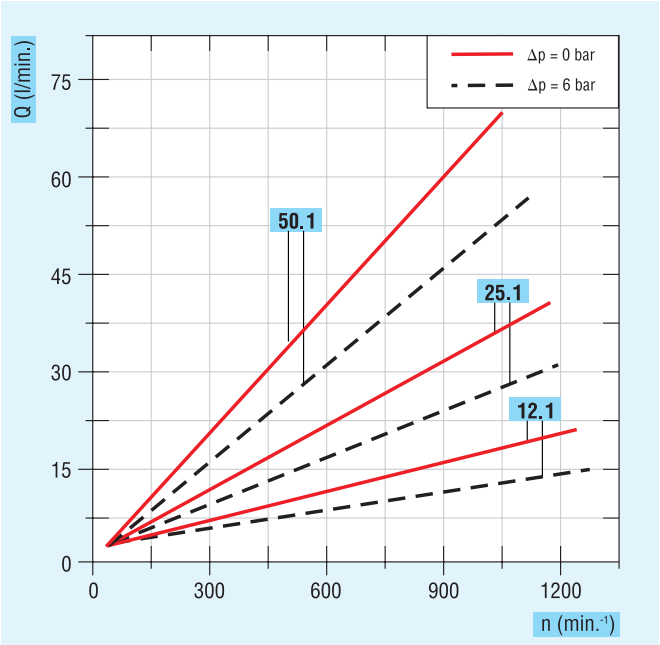

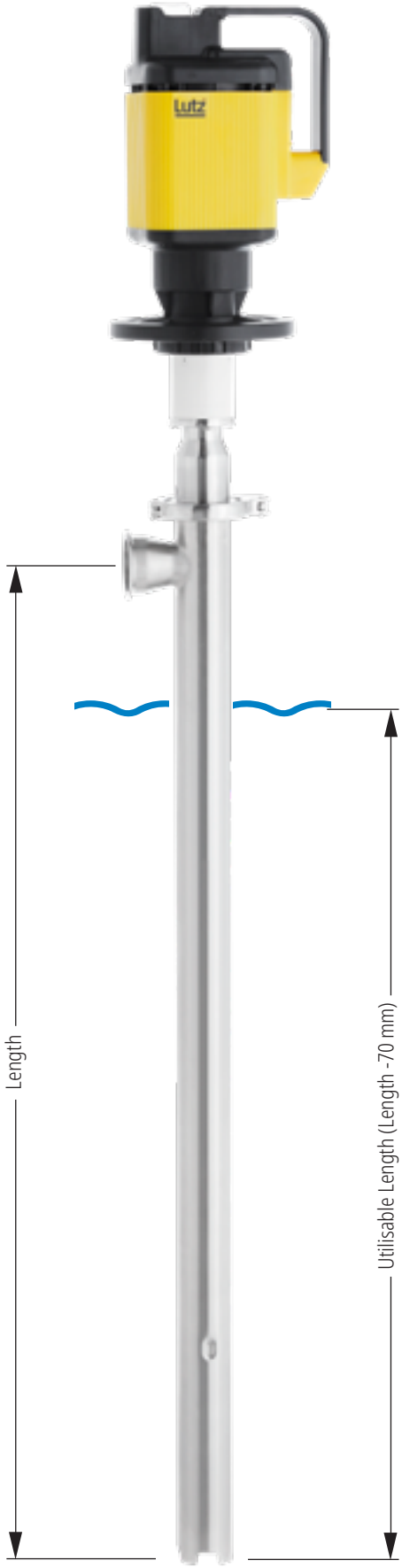

Lutz Eccentric Screw Pumps

B70V-H-D SanitaryPlus 12.1, 25.1

Product detail

Pump tube		B70V-H-D SanitaryPlus	
Size		**12.1**	**25.1**
Seal Mechanical seal	(MS)	MS	MS
Delivery rate*	up to l/min.	12	25
Delivery head*	up to bar	6	8
Temp. of medium	up to °C	100	100
Material outer tube		1.4404	1.4404
Immersion tube diameter	mm	54	54
Pressure joint	Tri-Clamp	DN 50	DN 50
Weight	kg	8	8
Length**	mm	1100	1100
Stator PTFE Seal FPM	Order No.	**0172-094** ●	**0172-194** ●
Stator PTFE Seal EPDM	Order No.	**0172-044** ●	**0172-144** ●

* Determined with water at 20 °C, three-phase motor (900 rpm)
** The lenght complies approx. to dimension C in the dimension table. Special length on request

● Explosion proof eccentric screw pump approved category 1 / 2 (acc. to ATEX) for pumping flammable liquids of the explosion group IIB (B70V-H) and temperature class T4 at 40 °C ambient temperature or temperature class T3 at 60 °C ambient temperature

Motor selection

Three-phase motors 230/400 V, 50 Hz, RAL 9005, Energy efficiency class IE 3 in accordance with EU regulations 640/2009 and 04/2014.

Special voltages, frequencies, protection types on request.

Motors with cable terminal box			
Version	0.75 kW, 900 1/min.	1.1 kW, 700 1/min.	1.1 kW, 900 1/min.
Protection type/weight	IP 55 16 kg	IP 55 40 kg	IP 55 31 kg
Order No.	**0172-901**	**0172-919**	**0172-903**

Motors with protection switch			
Version	0.75 kW, 900 1/min.	1.1 kW, 700 1/min.	1.1 kW, 900 1/min.
Protection type/weight	IP 55 22 kg	IP 55 40 kg	IP 55 32 kg
Order No.	**0172-900**	**0172-918**	**0172-902**

Motors, explosion proof		
Version	0.55 kW, 900 1/min.	0.95 kW, 900 1/min.
Marking	II 2 G Ex e II T3	II 2 G Ex e II T3
Protection type/weight	IP 55 17 kg	IP 55 25 kg
Order No.	**0172-804**	**0172-816**

Motors with frequency converter		
Version	0.75 kW, 180-900 1/min.	1.5 kW, 180-900 1/min.
Protection type/weight	IP 55 37 kg	IP 55 35 kg
Order No.	**0172-914**	**0172-913**

B70V-H-D SanitaryPlus 12.1, 25.1

for viscosities up to 100,000 mPas

Materials (coming into contact with the pumped medium):

Version:	B70V-H-D SanitaryPlus 12.1/25.1
Housing:	Stainless steel (1.4404)
Rotor/Shaft:	Stainless steel (1.4571, 1.4462)
Seals:	EPDM
Mechanical seal:	SiC/carbon/EPDM (FPM), optional SiC/SiC/EPDM (FPM)
Stator material:	PTFE, EPDM (Size 50.1)

Equipped with mounting strap and motor quick coupling as standard.

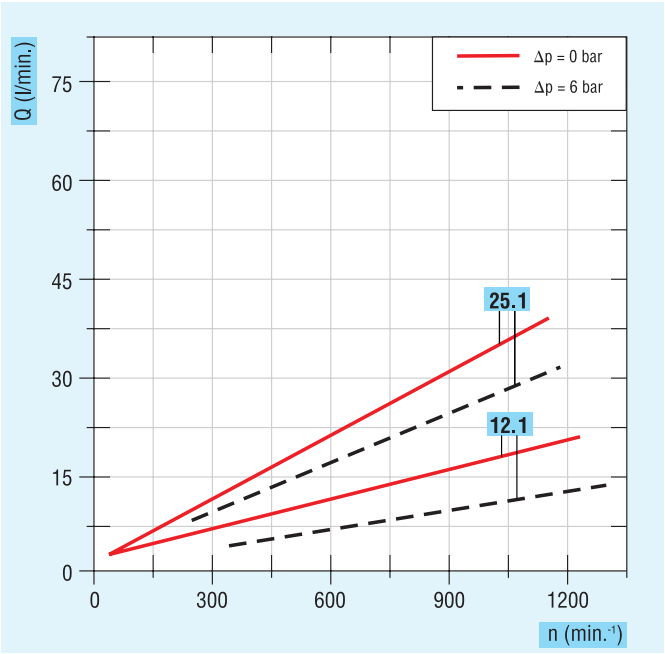

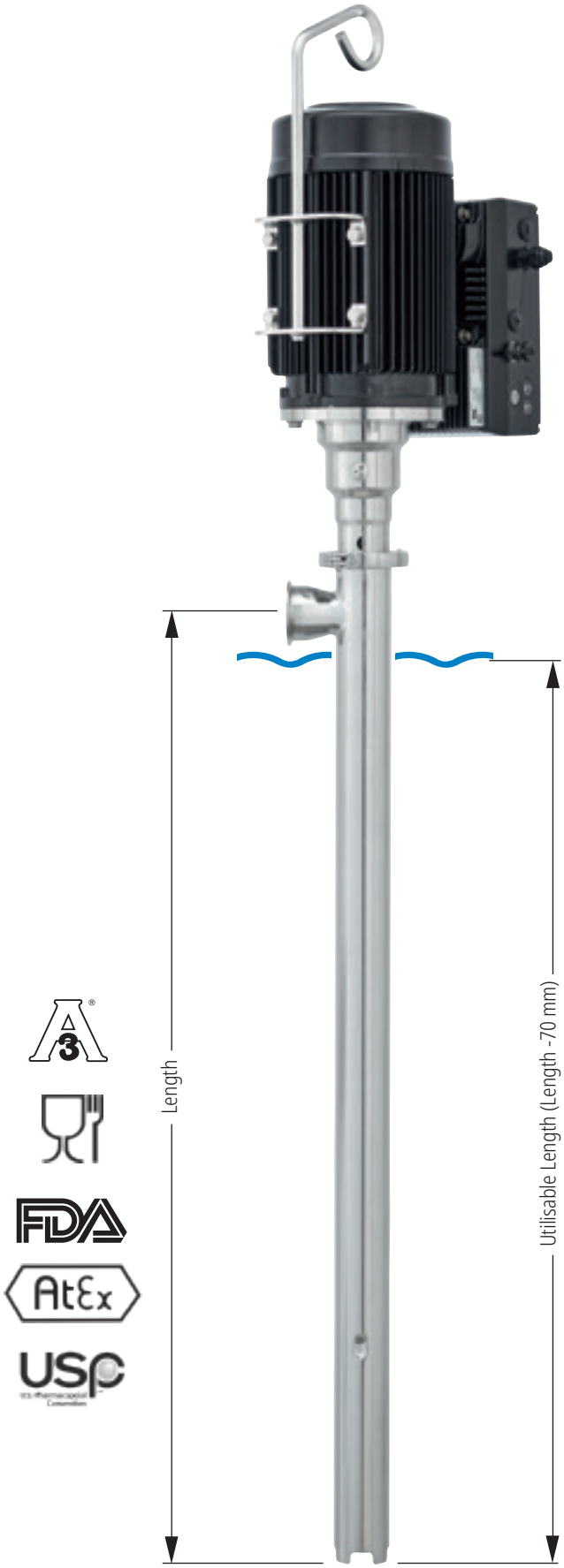

Lutz Eccentric Screw Pumps

B70V-H-D SanitaryPlus 25.2, 50.1, 75.1

Product detail

Pump tube		B70V-H-D SanitaryPlus		
Size		**25.2**	**50.1**	**75.1**
Seal Mechanical seal	(MS)	MS	MS	MS
Delivery rate*	up to l/min.	25	50	75
Delivery head*	up to bar	10	8	8
Temp. of medium	up to °C	100	100	100
Material outer tube		1.4404	1.4404	1.4404
Immersion tube diameter	mm	54	54	54
Pressure joint	Tri-Clamp	DN 50	DN 50	DN 50
Weight	kg	8	8	8
Length**	mm	1100	1100	1100
Stator EPDM Seal EPDM	Order No.	**–**	**0172-548**	**–**
Stator PTFE Seal FPM	Order No.	**0172-294** ●	**0172-594** ●	**0172-584** ●
Stator PTFE Seal EPDM	Order No.	**0172-244** ●	**0172-544** ●	**0172-554** ●

* Determined with water at 20 °C, three-phase motor (900 rpm)
** The lenght complies approx. to dimension C in the dimension table. Special length on request

● Explosion proof eccentric screw pump approved category 1 / 2 (acc. to ATEX) for pumping flammable liquids of the explosion group IIB (B70V-H) and temperature class T4 at 40 °C ambient temperature or temperature class T3 at 60 °C ambient temperature

Motor selection

Three-phase motors 230/400 V, 50 Hz, RAL 9005, Energy efficiency class IE 3 in accordance with EU regulations 640/2009 and 04/2014.

Special voltages, frequencies, protection types on request.

Motors with cable terminal box		
Version	1.1 kW, 900 1/min.	1.1 kW, 700 1/min.
Protection type/weight	IP 55 31 kg	IP 55 40 kg
Order No.	**0172-903**	**0172-919**

Motors with protection switch		
Version	1.1 kW, 700 1/min.	1.1 kW, 900 1/min.
Protection type/weight	IP 55 40 kg	IP 55 32 kg
Order No.	**0172-918**	**0172-902**

Motor, explosion-proof	
Version	0.95 kW, 900 1/min.
Marking	II 2 G Ex e II T3
Protection type/weight	IP 55 25 kg
Order No.	**0172-816**

Motors with frequency converter		
Version	0.75 kW, 180-900 1/min.	1.5 kW, 180-900 1/min.
Protection type/weight	IP 55 37 kg	IP 55 35 kg
Order No.	**0172-914**	**0172-913**

B70V-H-D SanitaryPlus 25.2, 50.1, 75.1

for viscosities up to 100,000 mPas

Materials (coming into contact with the pumped medium):

Version:	B70V-H-D SanitaryPlus 25.2/50.1/75.1
Housing:	Stainless steel (1.4404)
Rotor/Shaft:	Stainless steel (1.4571, 1.4462)
Seals:	EPDM
Mechanical seal:	SiC/carbon/EPDM (FPM), optional SiC/SiC/EPDM (FPM)
Stator material:	PTFE, EPDM (Size 50.1)

Equipped with mounting strap and motor quick coupling as standard.

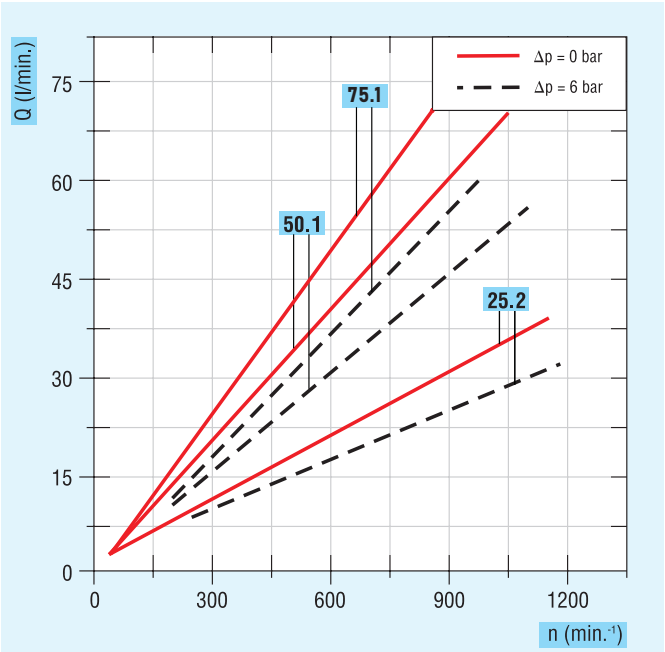

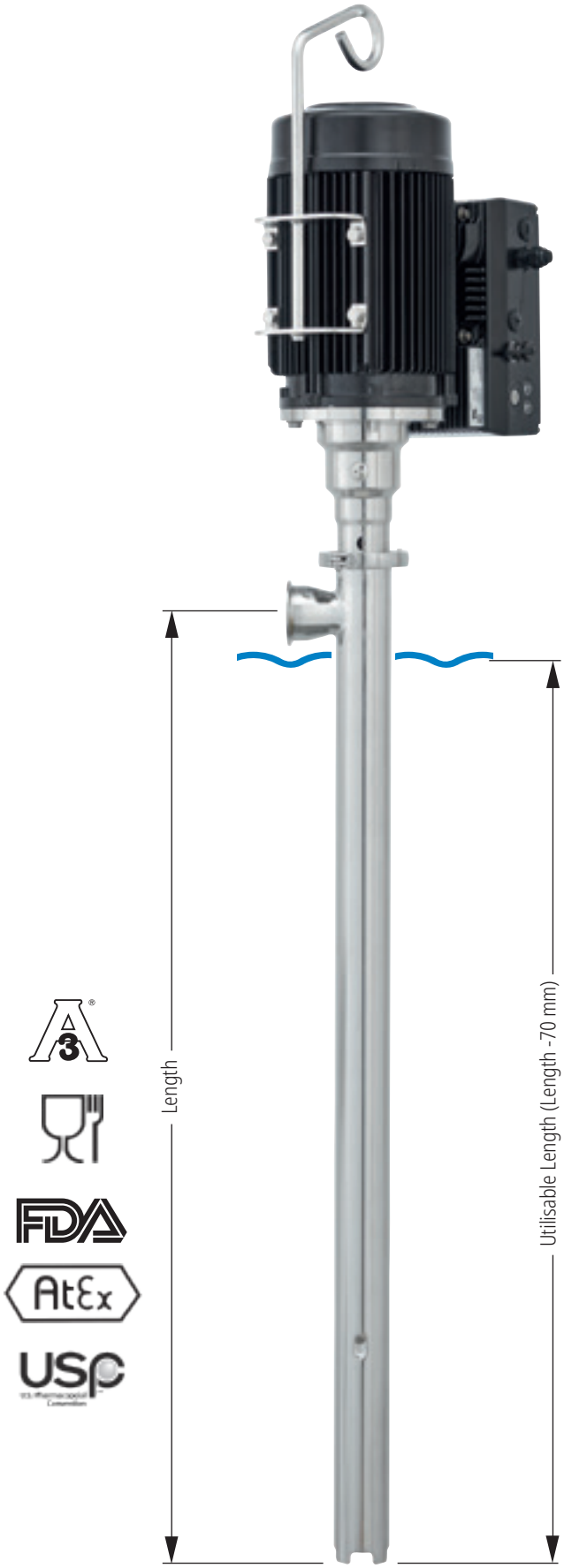

Lutz Drum and Container Pumps in PURE Version

Pumps and flow meters in contact with food products are considered to be "food contact materials" and are thus subject to strict legal regulations. The new Lutz PURE series includes products which are in conformity with the ATEX Directive as well as with the FDA Approval and the European Regulation according to 1935/2004/EC.

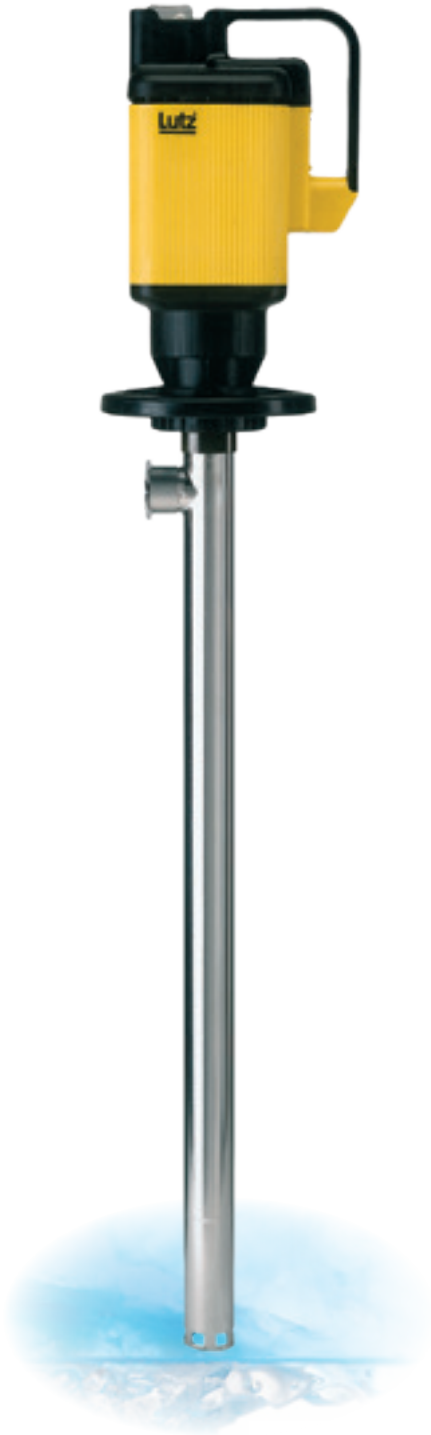

Lutz Drum Pumps
SS 41 in PURE Version

A versatile and variable drum pump ideal for corrosive and neutral, aqueous to slightly viscous fluids in the production and processing of food products.

- + Low weight, easy handling
- + Completely dismantable and cleanable
- + Two impeller forms for flow rate as required
- + Mechanically sealed (MS) version suitable for crystallizing and adhesive liquids, as well as liquids containing solids
- + Not filled with lubricants, preventing product contamination
- + Sealless version (SL) is suitable for limited dry running

Properties:

- Materials in contact with liquids in food quality
- Shaft seal: Mechanically sealed (MS) or sealless (SL)
- Lutz hand wheel for quick motor assembly/disassembly and as carry handle
- Optionally available with electrical drive or compressed air drive with infinitely variable speed control.
- Explosion-proof versions approved in accordance with the ATEX Directive 2014/34/EU Category 1/2

Lutz Complete Drum Drainage Pumps and Mixing Pumps
RE SS 41 and MP SS 41 in PURE Version

Lutz RE complete drum drainage pumps allow you to remove selected raw materials and valuable food products from drums and containers leaving virtually no residue.

- Maximum pump utilisation and reduced drum cleaning effort
- Completely dismantable and cleanable
- Optimized complete drum drainage with a remaining residual quantity of approx. 0.1 liter
- No leakage when the pump is turned over or at an inclined position
- Also suitable for crystallizing and adhesive liquids, as well as liquids containing solids
- Sealing mechanism in pump foot
- Not filled with lubricants, preventing product contamination

PURE FDA

FDA AtEx

Lutz MP mixing pumps combine the function of agitator and pump in a single device. They are specifically developed for mixing and pumping food products which tend to form sediment after long periods of standing and must be homogenised before being processed.

- Agitator and pump in a single device
- Can change function during ongoing operation without having to be switched
- High mixing performance and flow rate for thorough homogenisation and rapid drainage
- Completely dismantable and cleanable
- Also suitable for crystallizing and adhesive liquids, as well as liquids containing solids
- Mixing apertures in the outer pipe can be opened and closed using a lever below the hand wheel
- Not filled with lubricants, preventing product contamination

PURE FDA

FDA AtEx

Properties:

- Materials in contact with liquids in food quality
- Lutz hand wheel for quick motor assembly/disassembly and as carry handle
- Optionally available with electrical drive or compressed air drive with infinitely variable speed control.
- Explosion-proof versions approved in accordance with the EX Directive 2014/34/EU Category 1/2

Lutz Drum and Container Pumps

Pump tube SS PURE (stainless steel) for aqueous and fatty foodstuffs

Product detail

Pump tube		SS-SL		SS-MS	
Type of impeller		Impeller	Rotor	Impeller	Rotor
Category 1 / 2 (acc. to ATEX)		no	no	yes	yes
Immersion tube diameter:	up to mm	41	41	41	41
Temperature of medium:	up to °C	100	100	100	100
Material:	Pump tube	1.4571	1.4571	1.4571	1.4571
	Impeller/Rotor	ETFE	ETFE	ETFE	ETFE
Hose connection:	Tri-Clamp DN	32	32	32	32
Length: 700 mm* sealless	Order No.	**0150-014**	**0150-011**	–	–
Length: 700 mm* seal FPM	Order No.	–	–	**0151-083**	**0151-076**
Length: 700 mm* seal EPDM	Order No.	–	–	**0151-084**	**0151-077**
Length: 1000 mm* sealless	Order No.	**0150-015**	**0150-012**	–	–
Length: 1000 mm* seal FPM	Order No.	–	–	**0151-085**	**0151-078**
Length: 1000 mm* seal EPDM	Order No.	–	–	**0151-086**	**0151-079**
Length: 1200 mm* sealless	Order No.	**0150-016**	**0150-013**	–	–
Length: 1200 mm* seal FPM	Order No.	–	–	**0151-087**	**0151-081**
Length: 1200 mm* seal EPDM	Order No.	–	–	**0151-088**	**0151-082**

*The lenght complies approx. to dimension C in the dimension table. Special lengths 200–2500 mm on request

Choice of motors	MI 4	MI 4-E	Operating data					
			Characteristic curve no.		401	400	401	400
	-	with speed controller	Flow rate[1]	up to/min.	117	210	117	210
			Delivery head	up to m wc	19	10	19	10
Output:	500 W	500 W	Viscosity	up to mPas	500	350	500	350
Voltage:	230 V	230 V	Density	up to kg/dm³	1.4	1.1	1.4	1.1
Order No.	**0030-000**	**0030-001**	Weight (kg)	Motor + pump tube	5.7	5.7	5.7	5.7

	MA II 3		Characteristic curve no.		403	402	403	402
Output:	460 W	460 W	Flow rate[1]	up to/min.	95	178	95	178
Voltage:	230 V	230 V	Delivery head	up to m wc	14	9	14	9
LVR.:	no	yes	Viscosity	up to mPas	350	200	350	200
			Density	up to kg/dm³	1.6	1.2	1.6	1.2
Order No.	**0060-000**	**0060-008**	Weight (kg)	Motor + pump tube	7.5	7.5	7.5	7.5

	MA II 5	MA II 5	MA II 5 S						
				Characteristic curve no.		405	404	405	404
Output:	575 W	575 W	575 W	Flow rate[1]	up to/min.	100	190	100	190
Voltage:	230 V	230 V	230 V	Delivery head	up to m wc	16	10	16	10
LVR.:	no	yes	no	Viscosity	up to mPas	700	550	700	550
			acid-proof	Density	up to kg/dm³	1.8	1.3	1.8	1.3
Order No.	**0060-001**	**0060-009**	**0060-091**	Weight (kg)	Motor + pump tube	8.3	8.3	8.3	8.3

	MA II 7		Characteristic curve no.		407	406	407	406
Output:	795 W	795 W	Flow rate[1]	up to/min.	115	210	115	210
Voltage:	230 V	230 V	Delivery head	up to m wc	20	13	20	13
LVR.:	no	yes	Viscosity	up to mPas	500	400	500	400
			Density	up to kg/dm³	1.9	1.4	1.9	1.4
Order No.	**0060-002**	**0060-010**	Weight (kg)	Motor + pump tube	9.5	9.5	9.5	9.5

Low-voltage release (LVR.): Prevents the pump from starting up again without warning after a power failure. It is recommended when pumping hazardous liquids.

	MD1xL	MD2xL	Characteristic curve no.		409	408	409	408
Output:	1000 W	1000 W	Flow rate[1]	up to/min.	124	276	124	276
Operating			Delivery head	up to m wc	35	20	35	20
pressure:	6 bar	6 bar	Viscosity	up to mPas	1000	1000	1000	1000
		infinitely variable speed	Density	up to kg/dm³	2.8	2.8	2.8	2.8
Order No.	**0004-725**	**0004-735**	Weight (kg)	Motor + pump tube	4.3	4.3	4.3	4.3

	B4/GT		Characteristic curve no.		411	410	411	410
Output:	750 W	750 W	Flow rate[1]	up to/min.	100	180	100	180
Voltage:	230/400 V	230/400 V	Delivery head	up to m wc	12	13	12	13
Protection			Viscosity	up to mPas	500	400	500	400
switch	no	yes	Density	up to kg/dm³	2.2	2.0	2.2	2.0
Order No.	**0004-050**	**0004-052**	Weight (kg)	Motor + pump tube	14.7	14.7	14.7	14.7

[1] The maximum flow rate is a value determined by means of a test bench and measured with water at a medium temperature of approx. 20°C. The measurement is carried out at the pressure joint of the pump, without hose, nozzle or flow meter. The flow rate achievable in use is lower and depends on the individual application, the media properties and the configuration of the pump. The max. delivery head is also dependent on the pump design, motor and medium. Viscosity determined with oil.

Special voltages and frequencies on request.

Pump tube SS PURE (stainless steel)

for aqueous and fatty foodstuffs

Materials (coming into contact with the pumped medium):

Version:	SL-R	SL-L	MS-FPM	MS-EPDM
Housing:	SS (1.4571)	SS (1.4571)	SS (1.4571)	SS (1.4571)
Impeller:	ETFE	ETFE	ETFE	ETFE
Seals:	none	none	FPM	EPDM
Mechanical seals:	none	none	Carbon, Ceramic, PTFE, SS (1.4571), HC-4 (2.4610)	Carbon, Ceramic, PTFE, SS (1.4571), HC-4 (2.4610)
Bearing:	Pure Carbon	Pure Carbon	Pure Carbon	Pure Carbon
Drive shaft:	SS (1.4571)	SS (1.4571)	SS (1.4571)	SS (1.4571)

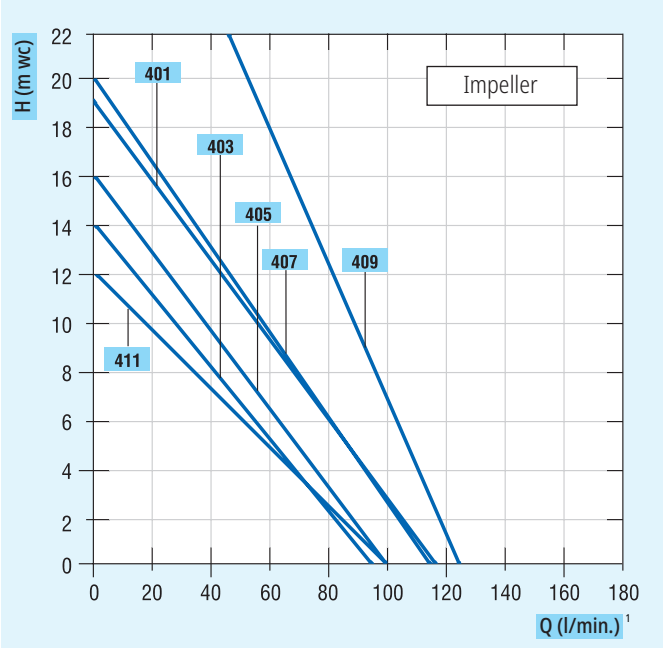

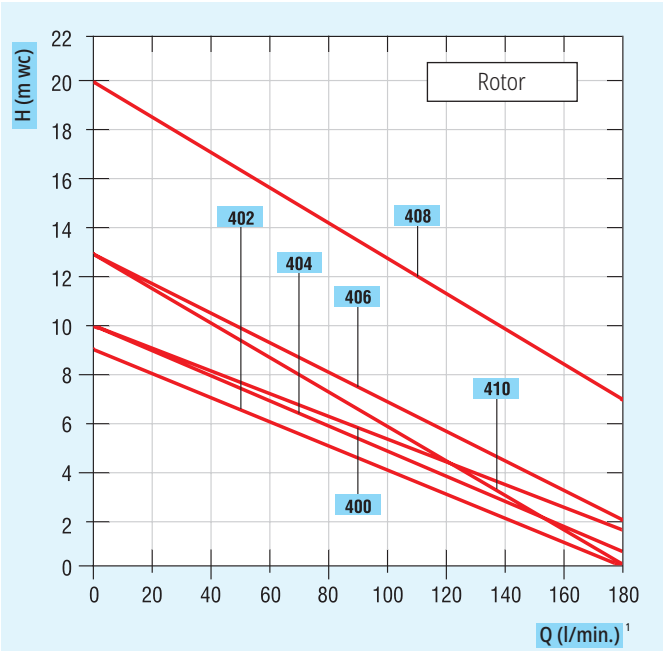

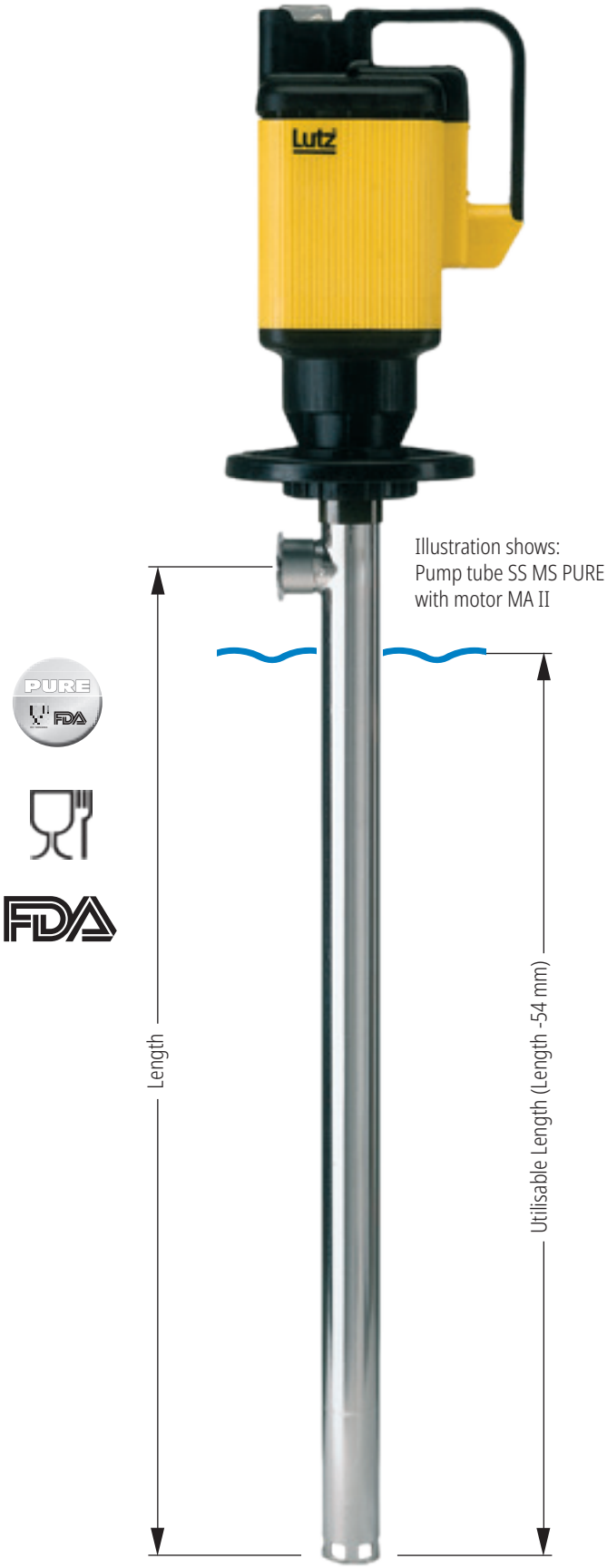

Illustration shows:
Pump tube SS MS PURE
with motor MA II

[1] The maximum flow rate is a value determined by means of a test bench and measured with water at a medium temperature of approx. 20°C. The measurement is carried out at the pressure joint of the pump, without hose, nozzle or flow meter. The flow rate achievable in use is lower and depends on the individual application, the media properties and the configuration of the pump. The max. delivery head is also dependent on the pump design, motor and medium. Viscosity determined with oil.

Lutz Drum and Container Pumps

Pump tube SS PURE (stainless steel) for alcoholic, highly flammable foodstuffs

Product detail

Pump tube		SS-MS	
Type of impeller		Impeller	Rotor
Category 1 / 2 (acc. to ATEX)		yes	yes
Immersion tube diameter:	up to mm	41	41
Temperature of medium:	up to °C	100	100
Material:	Pump tube Impeller/Rotor	1.4571 ETFE	1.4571 ETFE
Hose connection:	Tri-Clamp DN	32	32
Length: 700 mm* seal FPM	Order No.	**0151-083**	**0151-076**
Length: 700 mm* seal EPDM	Order No.	**0151-084**	**0151-077**
Length: 1000 mm* seal FPM	Order No.	**0151-085**	**0151-078**
Length: 1000 mm* seal EPDM	Order No.	**0151-086**	**0151-079**
Length: 1200 mm* seal FPM	Order No.	**0151-087**	**0151-081**
Length: 1200 mm* seal EPDM	Order No.	**0151-088**	**0151-082**

*The lenght complies approx. to dimension C in the dimension table. Special lengths 200–2500 mm on request

Choice of motors			Operating data					
	ME II 3		Characteristic curve no.		453	452	453	452
Output:	460 W	460 W	Flow rate[1]	up to/min.	95	178	95	178
Voltage:	230 V	230 V	Delivery head	up to m wc	14	9	14	9
LVR.:	yes	no	Viscosity	up to mPas	350	200	350	200
			Density	up to kg/dm³	1.6	1.2	1.6	1.2
Order No.	**0050-000**	**0050-016**	Weight (kg)	Motor + pump tube	8.7	8.7	8.7	8.7
	ME II 5		Characteristic curve no.		455	454	455	454
Output:	580 W	580 W	Flow rate[1]	up to/min.	100	190	100	190
Voltage:	230 V	230 V	Delivery head	up to m wc	16	10	16	10
LVR.:	yes	no	Viscosity	up to mPas	700	550	700	550
			Density	up to kg/dm³	1.8	1.3	1.8	1.3
Order No.	**0050-001**	**0050-017**	Weight (kg)	Motor + pump tube	9.6	9.6	9.6	9.6
	ME II 7		Characteristic curve no.		457	456	457	456
Output:	795 W	795 W	Flow rate[1]	up to/min.	115	210	115	210
Voltage:	230 V	230 V	Delivery head	up to m wc	20	13	20	13
LVR.:	yes	no	Viscosity	up to mPas	500	400	500	400
			Density	up to kg/dm³	1.9	1.4	1.9	1.4
Order No.	**0050-002**	**0050-018**	Weight (kg)	Motor + pump tube	10.8	10.8	10.8	10.8
	ME II 8		Characteristic curve no.		459	458	459	458
Output:	930 W	930 W	Flow rate[1]	up to/min.	123	243	123	243
Voltage:	230 V	230 V	Delivery head	up to m wc	26	15	26	15
LVR.:	yes	no	Viscosity	up to mPas	750	650	750	650
			Density	up to kg/dm³	1.9	1.4	1.9	1.4
Order No.	**0050-042**	**0050-041**	Weight (kg)	Motor + pump tube	10.8	10.8	10.8	10.8

Low-voltage release (LVR):
Prevents the pump from starting up again without warning after a power failure. Compulsory for explosive areas, in case no special measures are taken (e.g. remote control).

	MD1xL	**MD2xL**	Characteristic curve no.		461	460	461	460
Output:	1000 W	1000 W	Flow rate[1]	up to/min.	124	276	124	276
Operating pressure:	6 bar	6 bar	Delivery head	up to m wc	35	20	35	20
			Viscosity	up to mPas	1000	1000	1000	1000
		infinitely variable speed	Density	up to kg/dm³	2.8	2.8	2.8	2.8
Order No.	**0004-725**	**0004-735**	Weight (kg)	Motor + pump tube	4.3	4.3	4.3	4.3

[1] The maximum flow rate is a value determined by means of a test bench and measured with water at a medium temperature of approx. 20°C. The measurement is carried out at the pressure joint of the pump, without hose, nozzle or flow meter. The flow rate achievable in use is lower and depends on the individual application, the media properties and the configuration of the pump. The max. delivery head is also dependent on the pump design, motor and medium. Viscosity determined with oil.

Special voltages and frequencies on request.

Pump tube SS PURE (stainless steel)

for alcoholic, highly flammable foodstuffs

Materials (coming into contact with the pumped medium):

Version:	MS-FPM	MS-EPDM
Housing:	stainless steel (1.4571)	stainless steel (1.4571)
Impeller:	ETFE	ETFE
Seals:	FPM	EPDM
Mechanical seal:	Carbon, Ceramic, PTFE, stainless steel, HC-4 (2.4610)	Carbon, Ceramic, PTFE, stainless steel, HC-4 (2.4610)
Bearing:	Pure Carbon	Pure Carbon
Drive shaft:	stainless steel (1.4571)	stainless steel (1.4571)

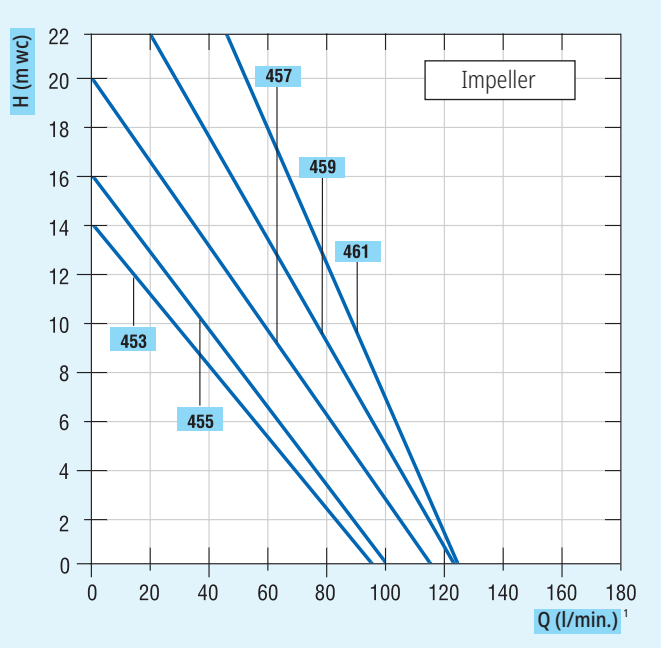

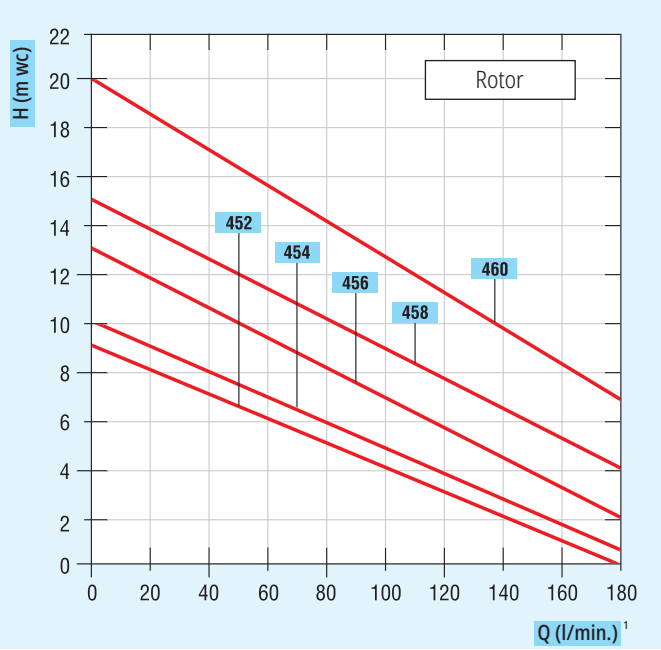

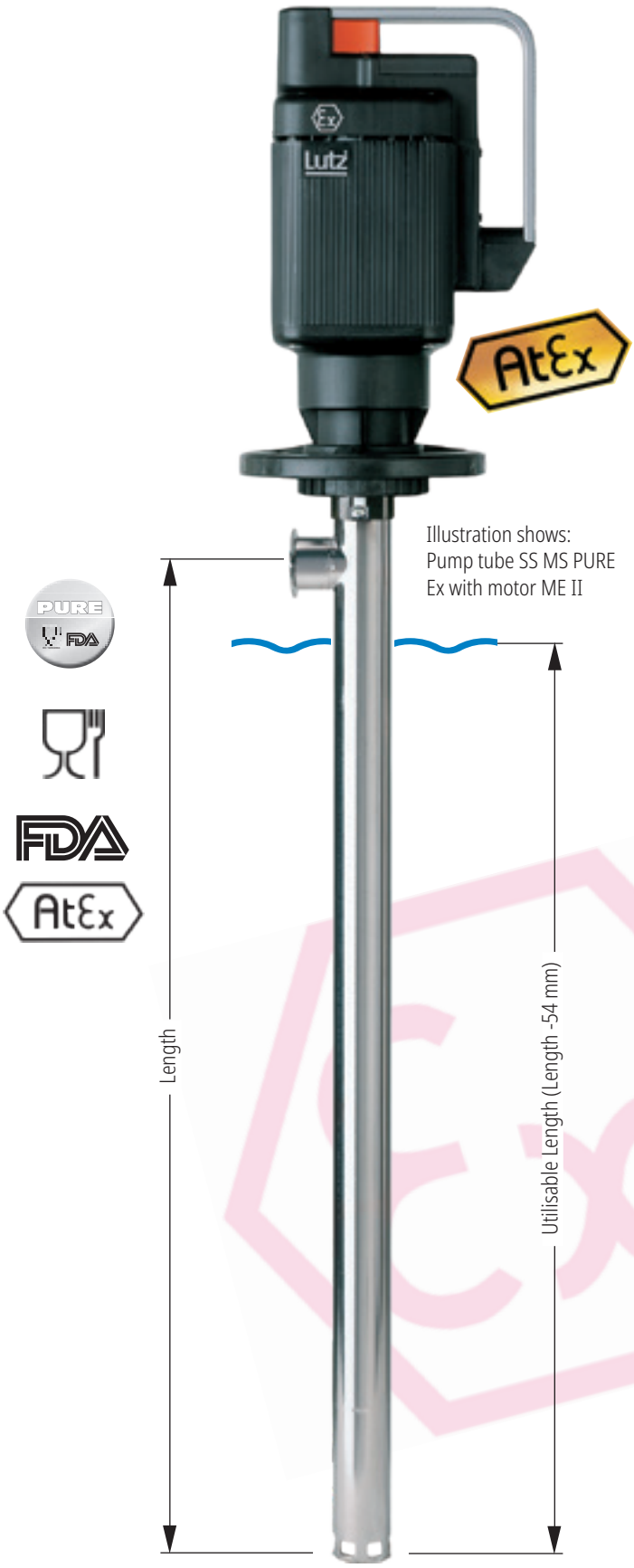

Illustration shows:
Pump tube SS MS PURE
Ex with motor ME II

[1] The maximum flow rate is a value determined by means of a test bench and measured with water at a medium temperature of approx. 20°C. The measurement is carried out at the pressure joint of the pump, without hose, nozzle or flow meter. The flow rate achievable in use is lower and depends on the individual application, the media properties and the configuration of the pump. The max. delivery head is also dependent on the pump design, motor and medium. Viscosity determined with oil.

Lutz Drum and Container Pumps

Pump tube RE-SS PURE (stainless steel) for complete drum drainage of aqueous and fatty foodstuffs

Product detail

Pump tube		RE-SS MS
Type of impeller		Impeller
Category 1 / 2 (acc. to ATEX)		ja
Immersion tube diameter:	up to mm	41
Temperature of medium:	up to °C	100
Material:	Pump tube	1.4571
	Impeller/Rotor	ETFE
Hose connection:	Tri-Clamp DN	32
Length: 700 mm* seal FPM	Order No.	**0151-180**
Length: 700 mm* seal EPDM	Order No.	**0151-181**
Length: 1000 mm* seal FPM	Order No.	**0151-182**
Length: 1000 mm* seal EPDM	Order No.	**0151-183**
Length: 1200 mm* seal FPM	Order No.	**0151-184**
Length: 1200 mm* seal EPDM	Order No.	**0151-185**

*The lenght complies approx. to dimension C in the dimension table. Special lengths 400–2000 mm on request

Choice of motors	MI 4	MI 4-E	Operating data		
	-	with speed controller	Characteristic curve no.		700
			Flow rate[1]	up to/min.	78
			Delivery head	up to m wc	17
Output:	500 W	500 W	Viscosity	up to mPas	700
Voltage:	230 V	230 V	Density	up to kg/dm³	1.4
Order No.	**0030-000**	**0030-001**	Weight (kg)	Motor + pump tube	6.0

	MA II 3				
			Characteristic curve no.		701
Output:	460 W	460 W	Flow rate[1]	up to/min.	77
Voltage:	230 V	230 V	Delivery head	up to m wc	14
LVR.:	no	yes	Viscosity	up to mPas	500
			Density	up to kg/dm³	1.6
Order No.	**0060-000**	**0060-008**	Weight (kg)	Motor + pump tube	7.8

	MA II 5	MA II 5	MA II 5 S			
				Characteristic curve no.		702
Output:	575 W	575 W	575 W	Flow rate[1]	up to/min.	77
Voltage:	230 V	230 V	230 V	Delivery head	up to m wc	14
LVR.:	no	yes	no	Viscosity	up to mPas	900
			acid-proof	Density	up to kg/dm³	1.8
Order No.	**0060-001**	**0060-009**	**0060-091**	Weight (kg)	Motor + pump tube	8.6

	MA II 7				
			Characteristic curve no.		703
Output:	795 W	795 W	Flow rate[1]	up to/min.	70
Voltage:	230 V	230 V	Delivery head	up to m wc	18
LVR.:	no	yes	Viscosity	up to mPas	700
			Density	up to kg/dm³	1.9
Order No.	**0060-002**	**0060-010**	Weight (kg)	Motor + pump tube	9.8

Low-voltage release (LVR.): Prevents the pump from starting up again without warning after a power failure. It is recommended when pumping hazardous liquids.

	MD1xL	MD2xL			
			Characteristic curve no.		704
Output:	1000 W	1000 W	Flow rate[1]	up to/min.	67
Operating pressure:	6 bar	6 bar	Delivery head	up to m wc	28
			Viscosity	up to mPas	1000
		infinitely variable speed	Density	up to kg/dm³	2.8
Order No.	**0004-725**	**0004-735**	Weight (kg)	Motor + pump tube	4.6

	B4/GT				
			Characteristic curve no.		705
Output:	750 W	750 W	Flow rate[1]	up to/min.	55
Voltage:	230/400 V	230/400 V	Delivery head	up to m wc	8.5
Protection switch	no	yes	Viscosity	up to mPas	600
			Density	up to kg/dm³	2.2
Order No.	**0004-050**	**0004-052**	Weight (kg)	Motor + pump tube	15.0

[1] The maximum flow rate is a value determined by means of a test bench and measured with water at a medium temperature of approx. 20°C. The measurement is carried out at the pressure joint of the pump, without hose, nozzle or flow meter. The flow rate achievable in use is lower and depends on the individual application, the media properties and the configuration of the pump. The max. delivery head is also dependent on the pump design, motor and medium. Viscosity determined with oil.

Special voltages and frequencies on request.

Pump tube RE-SS PURE (stainless steel)

for complete drum drainage of aqueous and fatty foodstuffs

Materials **(coming into contact with the pumped medium):**

Version:	MS-FPM	MS-EPDM
Housing:	stainless steel (1.4571)	stainless steel (1.4571)
Impeller:	ETFE	ETFE, optional PP
Sealing pot:	ETFE/stainless steel (1.4571)	ETFE/stainless steel (1.4571)
Seals:	FPM, PTFE	EPDM, PTFE
Mechanical seal:	Carbon, Ceramic, PTFE, HC-4 (2.4610), stainless steel 1.4571)	Carbon, Ceramic, PTFE, HC-4 (2.4610), stainless steel 1.4571)
Bearing:	Pure Carbon	Pure Carbon
Drive shaft:	stainless steel (1.4571)	stainless steel (1.4571)

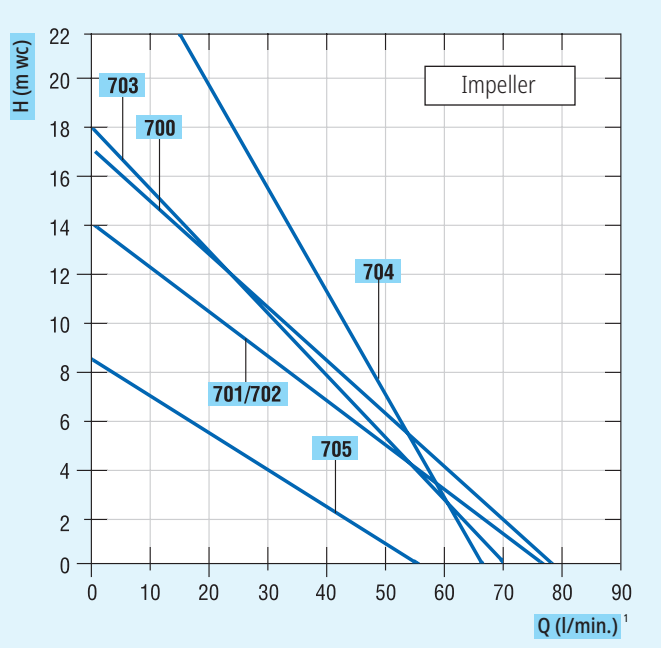

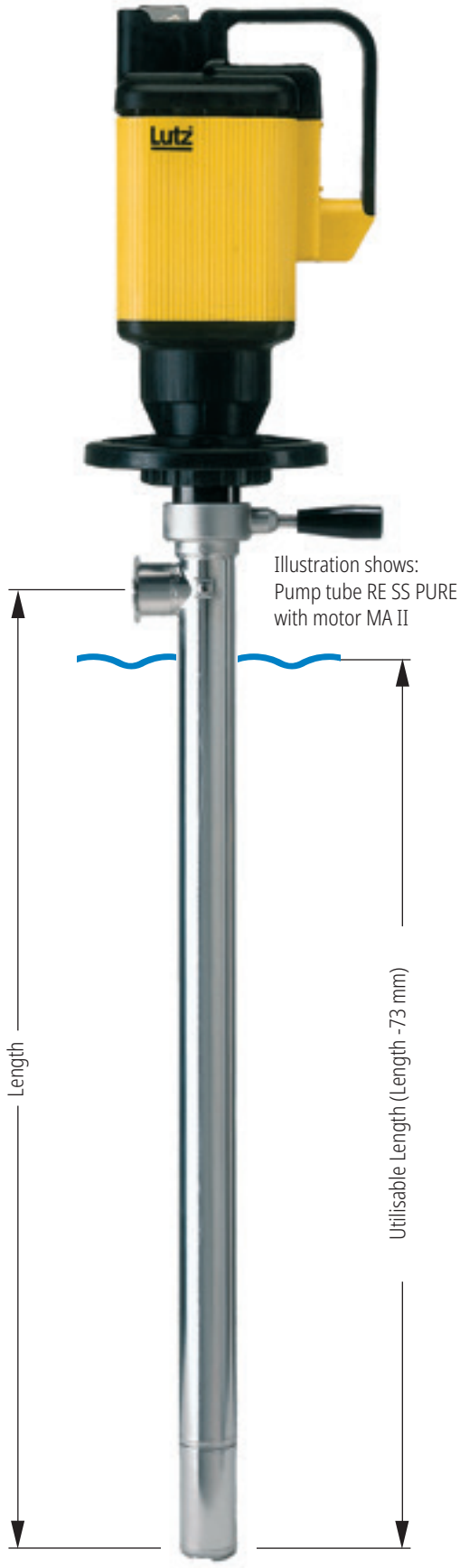

Illustration shows:
Pump tube RE SS PURE
with motor MA II

Complete drum drainage

Nearly completely drained.
Residual quantity < 0.10 litres.

[1] The maximum flow rate is a value determined by means of a test bench and measured with water at a medium temperature of approx. 20°C. The measurement is carried out at the pressure joint of the pump, without hose, nozzle or flow meter. The flow rate achievable in use is lower and depends on the individual application, the media properties and the configuration of the pump. The max. delivery head is also dependent on the pump design, motor and medium. Viscosity determined with oil.

Lutz Drum and Container Pumps

Pump tube RE-SS PURE (stainless steel) for complete drum drainage of alcoholic, highly flammable foodstuffs

Product detail

Pump tube		RE-SS MS
Type of impeller		Impeller
Category 1 / 2 (acc. to ATEX)		ja
Immersion tube diameter:	up to mm	41
Temperature of medium:	up to °C	100
Material:	Pump tube	1.4571
	Impeller/Rotor	ETFE
Hose connection:	Tri-Clamp DN	32
Length: 700 mm* seal FPM	Order No.	**0151-180**
Length: 700 mm* seal EPDM	Order No.	**0151-181**
Length: 1000 mm* seal FPM	Order No.	**0151-182**
Length: 1000 mm* seal EPDM	Order No.	**0151-183**
Length: 1200 mm* seal FPM	Order No.	**0151-184**
Length: 1200 mm* seal EPDM	Order No.	**0151-185**

*The lenght complies approx. to dimension C in the dimension table. Special lengths 400–2000 mm on request

Choice of motors			Operating data		
	ME II 3		Characteristic curve no.		750
Output:	460 W	460 W	Flow rate[1]	up to/min.	77
Voltage:	230 V	230 V	Delivery head	up to m wc	14
LVR.:	yes	no	Viscosity	up to mPas	500
			Density	up to kg/dm³	1.6
Order No.	**0050-000**	**0050-016**	Weight (kg)	Motor + pump tube	9.0
	ME II 5		Characteristic curve no.		751
Output:	580 W	580 W	Flow rate[1]	up to/min.	77
Voltage:	230 V	230 V	Delivery head	up to m wc	14
LVR.:	yes	no	Viscosity	up to mPas	900
			Density	up to kg/dm³	1.8
Order No.	**0050-001**	**0050-017**	Weight (kg)	Motor + pump tube	9.9
	ME II 7		Characteristic curve no.		752
Output:	795 W	795 W	Flow rate[1]	up to/min.	70
Voltage:	230 V	230 V	Delivery head	up to m wc	18
LVR.:	yes	no	Viscosity	up to mPas	700
			Density	up to kg/dm³	1.9
Order No.	**0050-002**	**0050-018**	Weight (kg)	Motor + pump tube	11.1
	ME II 8		Characteristic curve no.		753
Output:	930 W	930 W	Flow rate[1]	up to/min.	78
Voltage:	230 V	230 V	Delivery head	up to m wc	22
LVR.:	yes	no	Viscosity	up to mPas	950
			Density	up to kg/dm³	1.9
Order No.	**0050-042**	**0050-041**	Weight (kg)	Motor + pump tube	11.1

Low-voltage release (LVR):

Prevents the pump from starting up again without warning after a power failure. Compulsory for explosive areas, in case no special measures are taken (e.g. remote control).

	MD1xL	**MD2xL**	Characteristic curve no.		754
Output:	1000 W	1000 W	Flow rate[1]	up to/min.	67
Operating pressure:	6 bar	6 bar	Delivery head	up to m wc	28
		infinitely variable speed	Viscosity	up to mPas	1000
			Density	up to kg/dm³	2.8
Order No.	**0004-725**	**0004-735**	Weight (kg)	Motor + pump tube	4.6

[1] The maximum flow rate is a value determined by means of a test bench and measured with water at a medium temperature of approx. 20°C. The measurement is carried out at the pressure joint of the pump, without hose, nozzle or flow meter. The flow rate achievable in use is lower and depends on the individual application, the media properties and the configuration of the pump. The max. delivery head is also dependent on the pump design, motor and medium. Viscosity determined with oil.

Special voltages and frequencies on request.

Pump tube RE-SS PURE (stainless steel)

for complete drum drainage of alcoholic, highly flammable foodstuffs

Materials **(coming into contact with the pumped medium):**

Version:	MS-FPM	MS-EPDM
Housing:	stainless steel (1.4571)	stainless steel (1.4571)
Impeller:	ETFE	ETFE
Sealing pot:	ETFE/stainless steel (1.4571)	ETFE/stainless steel (1.4571)
Seals:	FPM, PTFE	EPDM, PTFE
Mechanical seal:	Carbon, Ceramic, PTFE, HC-4 (2.4610), stainless steel 1.4571)	Carbon, Ceramic, PTFE, HC-4 (2.4610), stainless steel 1.4571)
Bearing:	Pure Carbon	Pure Carbon
Drive shaft:	stainless steel (1.4571)	stainless steel (1.4571)

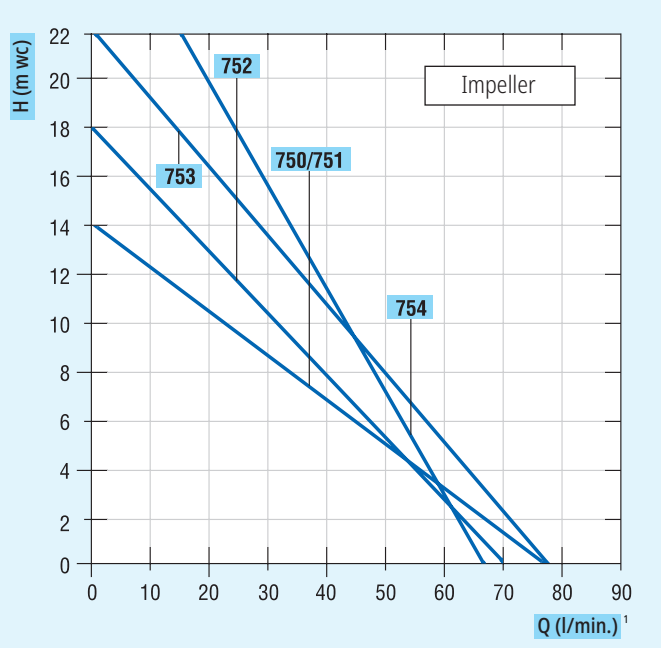

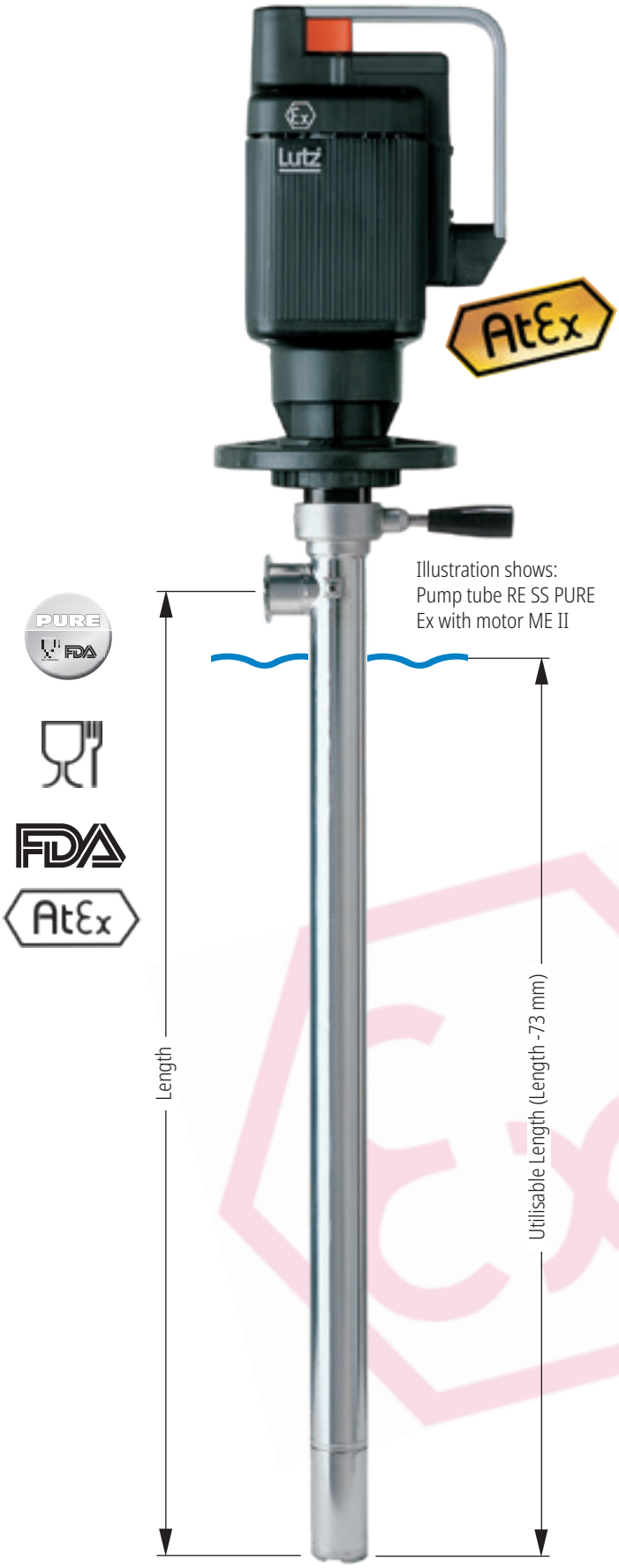

Illustration shows:
Pump tube RE SS PURE
Ex with motor ME II

Tip

The right pump for "hot applications".

[1] The maximum flow rate is a value determined by means of a test bench and measured with water at a medium temperature of approx. 20°C. The measurement is carried out at the pressure joint of the pump, without hose, nozzle or flow meter. The flow rate achievable in use is lower and depends on the individual application, the media properties and the configuration of the pump. The max. delivery head is also dependent on the pump design, motor and medium. Viscosity determined with oil.

Lutz Drum and Container Pumps

Pump tube MP-SS PURE (stainless steel) for mixing and pumping of aqueous and fatty foodstuffs

Product detail

Pump tube		MP-SS MS	
Type of impeller		Rotor	Rotor
Category 1 / 2 (acc. to ATEX)		nein	ja
Immersion tube diameter:	up to mm	41	41
Temperature of medium:	up to °C	100	100
Material:	Pump tube	1.4571	1.4571
	Impeller/Rotor	Niro	ETFE
Hose connection:	Tri-Clamp DN	32	32
Length: 1000 mm* seal FPM	Order No.	–	**0151-311**
Length: 1000 mm* seal EPDM	Order No.	–	**0151-312**
Length: 1000 mm* seal EPDM	Order No.	**0151-313**	–
Length: 1225 mm* seal FPM	Order No.	–	**0151-314**
Length: 1225 mm* seal EPDM	Order No.	–	**0151-315**
Length: 1225 mm* seal EPDM	Order No.	**0151-316**	–

*The lenght complies approx. to dimension C in the dimension table. Special lengths 600–2500 mm on request

Choice of motors / Operating data

	MI 4	MI 4-E
	-	with speed controller
Output:	500 W	500 W
Voltage:	230 V	230 V
Order No.	**0030-000**	**0030-001**

Characteristic curve no.		900
Flow rate[1]	up to/min.	210
Delivery head	up to m wc	10
Viscosity	up to mPas	350
Density	up to kg/dm³	1.1
Weight (kg)	Motor + pump tube	6.0

	MA II 3	
Output:	460 W	460 W
Voltage:	230 V	230 V
LVR.:	no	yes
Order No.	**0060-000**	**0060-008**

Characteristic curve no.		901
Flow rate[1]	up to/min.	178
Delivery head	up to m wc	9
Viscosity	up to mPas	200
Density	up to kg/dm³	1.2
Weight (kg)	Motor + pump tube	7.8

	MA II 5	MA II 5	MA II 5 S
Output:	575 W	575 W	575 W
Voltage:	230 V	230 V	230 V
LVR.:	no	yes	no
			acid-proof
Order No.	**0060-001**	**0060-009**	**0060-091**

Characteristic curve no.		902
Flow rate[1]	up to/min.	190
Delivery head	up to m wc	10
Viscosity	up to mPas	550
Density	up to kg/dm³	1.3
Weight (kg)	Motor + pump tube	8.6

	MA II 7	
Output:	795 W	795 W
Voltage:	230 V	230 V
LVR.:	no	yes
Order No.	**0060-002**	**0060-010**

Characteristic curve no.		903
Flow rate[1]	up to/min.	210
Delivery head	up to m wc	13
Viscosity	up to mPas	400
Density	up to kg/dm³	1.4
Weight (kg)	Motor + pump tube	9.8

Low-voltage release (LVR.): Prevents the pump from starting up again without warning after a power failure. It is recommended when pumping hazardous liquids.

	MD1xL	MD2xL
Output:	1000 W	1000 W
Operating pressure:	6 bar	6 bar
		infinitely variable speed
Order No.	**0004-725**	**0004-735**

Characteristic curve no.		904
Flow rate[1]	up to/min.	245
Delivery head	up to m wc	21
Viscosity	up to mPas	1000
Density	up to kg/dm³	2.8
Weight (kg)	Motor + pump tube	4.6

	B4/GT	
Output:	750 W	750 W
Voltage:	230/400 V	230/400 V
Protection switch	no	yes
Order No.	**0004-050**	**0004-052**

Characteristic curve no.		905
Flow rate[1]	up to/min.	140
Delivery head	up to m wc	10.5
Viscosity	up to mPas	400
Density	up to kg/dm³	2.0
Weight (kg)	Motor + pump tube	15.0

[1] The maximum flow rate is a value determined by means of a test bench and measured with water at a medium temperature of approx. 20°C. The measurement is carried out at the pressure joint of the pump, without hose, nozzle or flow meter. The flow rate achievable in use is lower and depends on the individual application, the media properties and the configuration of the pump. The max. delivery head is also dependent on the pump design, motor and medium. Viscosity determined with oil.

Special voltages and frequencies on request.

Pump tube MP-SS PURE (stainless steel)

for mixing and pumping of aqueous and fatty foodstuffs

Materials (coming into contact with the pumped medium):

Version:	MS-FPM	MS-EPDM
Housing:	stainless steel (1.4571)	stainless steel (1.4571)
Impeller:	ETFE	ETFE optional SS
Seals:	FPM, PTFE	EPDM, PTFE
Mechanical seal:	Carbon, Ceramic, PTFE, HC-4 (2.4610), stainless steel 1.4571)	Carbon, Ceramic, PTFE, HC-4 (2.4610), stainless steel 1.4571)
Bearing:	Pure Carbon	Pure Carbon
Drive shaft:	stainless steel (1.4571)	stainless steel (1.4571)

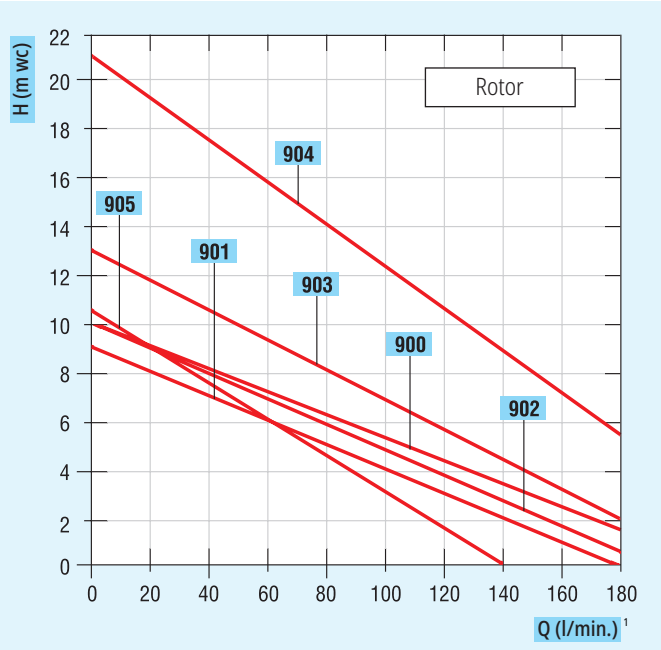

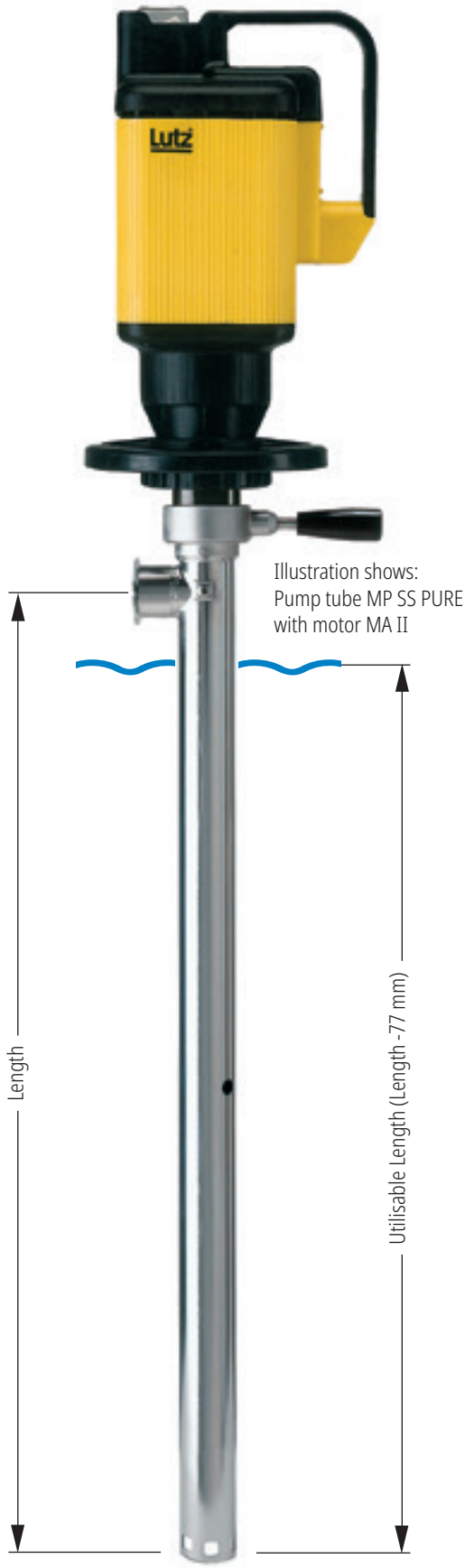

Illustration shows:
Pump tube MP SS PURE
with motor MA II

Tip

Which pump for which liquid?
See resistance table

[1] The maximum flow rate is a value determined by means of a test bench and measured with water at a medium temperature of approx. 20°C. The measurement is carried out at the pressure joint of the pump, without hose, nozzle or flow meter. The flow rate achievable in use is lower and depends on the individual application, the media properties and the configuration of the pump. The max. delivery head is also dependent on the pump design, motor and medium. Viscosity determined with oil.

Lutz Drum and Container Pumps

Pump tube MP-SS PURE (stainless steel) for mixing and pumping of alcoholic, highly flammable foodstuffs

Product detail

Pump tube		MP-SS MS
Type of impeller		Rotor
Category 1 / 2 (acc. to ATEX)		ja
Immersion tube diameter:	up to mm	41
Temperature of medium:	up to °C	100
Material:	Pump tube	1.4571
	Impeller/Rotor	ETFE
Hose connection:	Tri-Clamp DN	32
Length: 1000 mm* seal FPM	Order No.	**0151-311**
Length: 1000 mm* seal EPDM	Order No.	**0151-312**
Length: 1225 mm* seal FPM	Order No.	**0151-314**
Length: 1225 mm* seal EPDM	Order No.	**0151-315**

*The lenght complies approx. to dimension C in the dimension table. Special lengths 600–2500 mm on request

Choice of motors			Operating data		
	ME II 3		Characteristic curve no.		950
Output:	460 W	460 W	Flow rate[1]	up to/min.	178
Voltage:	230 V	230 V	Delivery head	up to m wc	9
LVR.:	yes	no	Viscosity	up to mPas	200
			Density	up to kg/dm³	1.2
Order No.	**0050-000**	**0050-016**	Weight (kg)	Motor + pump tube	9.0
	ME II 5		Characteristic curve no.		951
Output:	580 W	580 W	Flow rate[1]	up to/min.	190
Voltage:	230 V	230 V	Delivery head	up to m wc	10
LVR.:	yes	no	Viscosity	up to mPas	550
			Density	up to kg/dm³	1.3
Order No.	**0050-001**	**0050-017**	Weight (kg)	Motor + pump tube	9.9
	ME II 7		Characteristic curve no.		952
Output:	795 W	795 W	Flow rate[1]	up to/min.	210
Voltage:	230 V	230 V	Delivery head	up to m wc	13
LVR.:	yes	no	Viscosity	up to mPas	400
			Density	up to kg/dm³	1.4
Order No.	**0050-002**	**0050-018**	Weight (kg)	Motor + pump tube	11.1
	ME II 8		Characteristic curve no.		953
Output:	930 W	930 W	Flow rate[1]	up to/min.	216
Voltage:	230 V	230 V	Delivery head	up to m wc	14.5
LVR.:	yes	no	Viscosity	up to mPas	650
			Density	up to kg/dm³	1.4
Order No.	**0050-042**	**0050-041**	Weight (kg)	Motor + pump tube	11.1

Low-voltage release (LVR):
Prevents the pump from starting up again without warning after a power failure. Compulsory for explosive areas, in case no special measures are taken (e.g. remote control).

	MD1xL	**MD2xL**	Characteristic curve no.		954
Output:	1000 W	1000 W	Flow rate[1]	up to/min.	245
Operating pressure:	6 bar	6 bar	Delivery head	up to m wc	21
		infinitely variable speed	Viscosity	up to mPas	1000
			Density	up to kg/dm³	2.8
Order No.	**0004-725**	**0004-735**	Weight (kg)	Motor + pump tube	4.6

[1] The maximum flow rate is a value determined by means of a test bench and measured with water at a medium temperature of approx. 20°C. The measurement is carried out at the pressure joint of the pump, without hose, nozzle or flow meter. The flow rate achievable in use is lower and depends on the individual application, the media properties and the configuration of the pump. The max. delivery head is also dependent on the pump design, motor and medium. Viscosity determined with oil.

Special voltages and frequencies on request.

Pump tube MP-SS PURE (stainless steel)

for mixing and pumping of alcoholic, highly flammable foodstuffs

Materials (coming into contact with the pumped medium):

Version:	MS-FPM	MS-EPDM
Housing:	stainless steel (1.4571)	stainless steel (1.4571)
Impeller:	ETFE	ETFE
Seals:	FPM, PTFE	EPDM, PTFE
Mechanical seal:	Carbon, Ceramic, PTFE, HC-4 (2.4610), stainless steel 1.4571)	Carbon, Ceramic, PTFE, HC-4 (2.4610), stainless steel 1.4571)
Bearing:	Pure Carbon	Pure Carbon
Drive shaft:	stainless steel (1.4571)	stainless steel (1.4571)

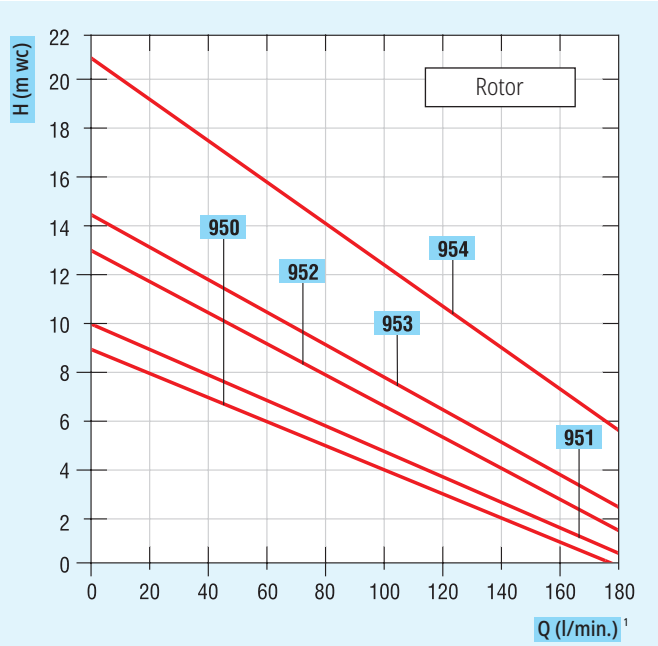

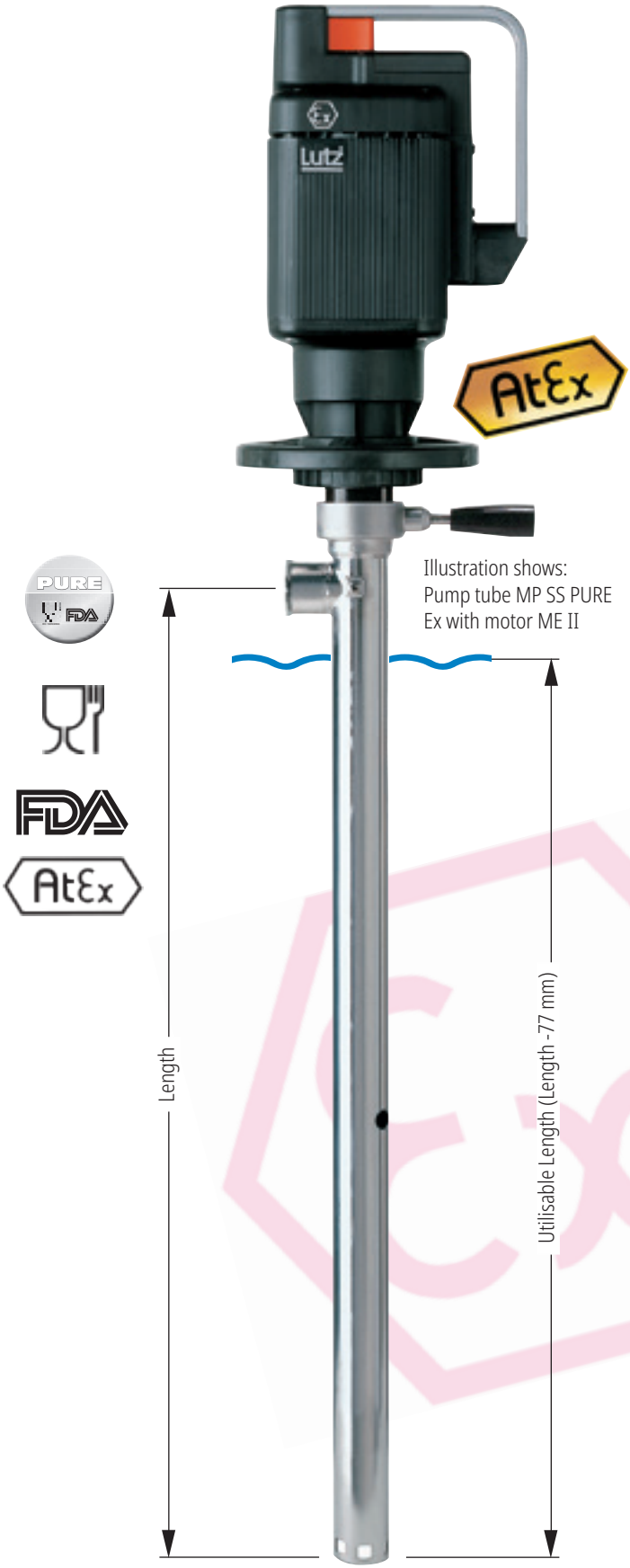

Illustration shows:
Pump tube MP SS PURE
Ex with motor ME II

[1] The maximum flow rate is a value determined by means of a test bench and measured with water at a medium temperature of approx. 20°C. The measurement is carried out at the pressure joint of the pump, without hose, nozzle or flow meter. The flow rate achievable in use is lower and depends on the individual application, the media properties and the configuration of the pump. The max. delivery head is also dependent on the pump design, motor and medium. Viscosity determined with oil.

Lutz Eccentric Screw Pumps in PURE Version

Lutz Eccentric Screw Pumps
HD-E SS in PURE Version

The Lutz HD-E combines the advantages of a handy drum pump and the gentle operation of a robust eccentric screw pump. Ideal for pumping viscous raw materials and food products.

- + Ideal for slightly to moderately viscous liquids up to 4,000 mPas
- + Gentle product pumping
- + Quiet operation
- + Easy handling
- + Simple cleaning without tools
- + Not filled with lubricants, preventing product contamination

Properties:

- Displacement pump using the eccentric screw principle
- Materials in contact with liquids in food quality
- Low pulsation, even pumping flow
- Practically no abrasive effect on the medium
- Compact dimensions
- Easily detachable outer pipe
- High-performance single-phase 230 V/ 50 Hz motor

Lutz Eccentric Screw Pumps
HD-E-SR SS in PURE Version

The Lutz HD-E-SR combines the advantages of a handy drum pump and the gentle operation of a robust eccentric screw pump. Ideal for pumping moderately and high viscosity raw materil and foodstuffs.

- + Ideal for moderately and high viscosity liquids up to 30.000 mPas
- + For narrow-necked containers and smaller bungholes Ø 42 mm
- + Gentle product pumping
- + Quiet operation
- + Easy handling due to low weight
- + Simple cleaning without tools
- + Not filled with lubricants, preventing product contamination

PURE FDA

FDA

Properties:

- Displacement pump using the eccentric screw principle
- Materials in contact with liquids in food quality
- Low pulsation, even pumping flow
- Practically no abrasive effect on the medium
- Compact dimensions
- Easily detachable outer pipe
- Choice of powerful compressed air motor or AC motor 230 V/ 50 Hz (110 V/ 60 Hz)

Lutz Eccentric Screw Pumps in PURE Version

Lutz Eccentric Screw Pumps
B70V-SR PURE in PURE Version

This convenient and powerful pump will take you „through thick and thin“. It covers an enormous range: The B70 V-SR is suitable for aqueous to highly-viscous substances with or without fibrous or solid matters. The pump is either air operated or with 230 V AC voltage (different voltages and frequencies on request), which makes it the ideal partner, even in mobile applications. The delivery rate amounts up to 50 l/min. with a delivery head of up to 8 bar.

- For liquids susceptible to abrasion or highly viscous liquids
- Gentle product pumping
- Variable flow rate (in conjunction with speed controller)
- Easy handling
- Easy separation of motor and pump tube by Lutz handwheel
- Quick to dismantle, easy to clean
- Not filled with lubricants, preventing product contamination

Properties:

- Displacement pump using the eccentric screw principle
- Materials in contact with liquids in food quality
- Low pulsation, even pumping flow
- Practically no abrasive effect on the medium
- Easily detachable outer pipe
- For mobile and stationary use
- Choice of powerful compressed air motor or AC motor 230 V/ 50 Hz (110 V/ 60 Hz)

Lutz Eccentric Screw Pumps
B70V PURE in PURE Version

Lutz B70V PURE series eccentric screw pumps are well-suited for liquids which are highly viscous or susceptible to abrasion, as well as liquids with and without fibre or solid content. Quiet-running, low-wear three-phase drives, or reduction gear and universal or compressed air drive for mobile use.

- For liquids susceptible to abrasion or highly viscous liquids
- Gentle product pumping
- Variable flow rate (in conjunction with speed controller / frequency converter)
- Easy handling
- Quick-action motor coupling enables the motor and pump tube to be connected and separated quickly
- Quick to dismantle, easy to clean
- Not filled with lubricants, preventing product contamination

Properties:

- Displacement pump using the eccentric screw principle
- Materials in contact with liquids in food quality
- Low pulsation, even pumping flow
- Practically no abrasive effect on the medium
- Easily detachable outer pipe
- For mobile and stationary use
- Optionally available with integrated frequency converter

Lutz Eccentric Screw Pumps

Lutz HD-E PURE for medium viscous foodstuffs

Product detail

Pump tube		HD-E PURE
Category 1 / 2 (acc. to ATEX)		no
Immersion tube diameter:	up to mm	41
Temperature of medium:	up to °C	100
Material:	Pump tube	Stainless steel (1.4571)
	Stator	PTFE
Pressure joint:	Tri-Clamp DN	32
Weight:	kg	3.5
Length: 1000 mm* seal FPM	Order No.	**0155-021**
Length: 1000 mm* seal EPDM	Order No.	**0155-022**

*The lenght complies approx. to dimension C in the dimension table. Special lengths 600–1500 mm on request

Choice of motors		Operating data		
Single phase motor				
Output:	0.55 kW	Delivery rate	up to l/min.	20
Voltage:	230 V	Delivery head	up to bar	4
Speed:	1500 1/min	Viscosity	mPas	500-4000
Protection type:	IP 54	Weight (kg)		11.9
Order No.	**0155-032**			

HD-E PURE

for viscosities from 500 to 4000 mPas

Materials (coming into contact with the pumped medium)

Version:	HD-E PURE FPM	HD-E PURE EPDM
Pump tube:	Stainless steel (1.4571)	Stainless steel (1.4571)
Stator:	PTFE	PTFE
Mechanical seal:	Stainless steel/Carbon/FPM	Stainless steel/Carbon/EPDM
Secondary seal:	FPM	EPDM
Drive shaft:	Stainless steel (1.4571)	Stainless steel (1.4571)

1 Bearing head with mechanical seal
- Compact unit for bearing and bearing shaft
- Wide range of mechanical seals

2 Easy detachable pump tube
- Easy cleaning
- No tools for disassembling of pump

3 Free running drive shaft
- Easy to clean

4 Delivery element eccentric
- Smooth pumping of liquids
- High pressure
- Constant volumetric flow

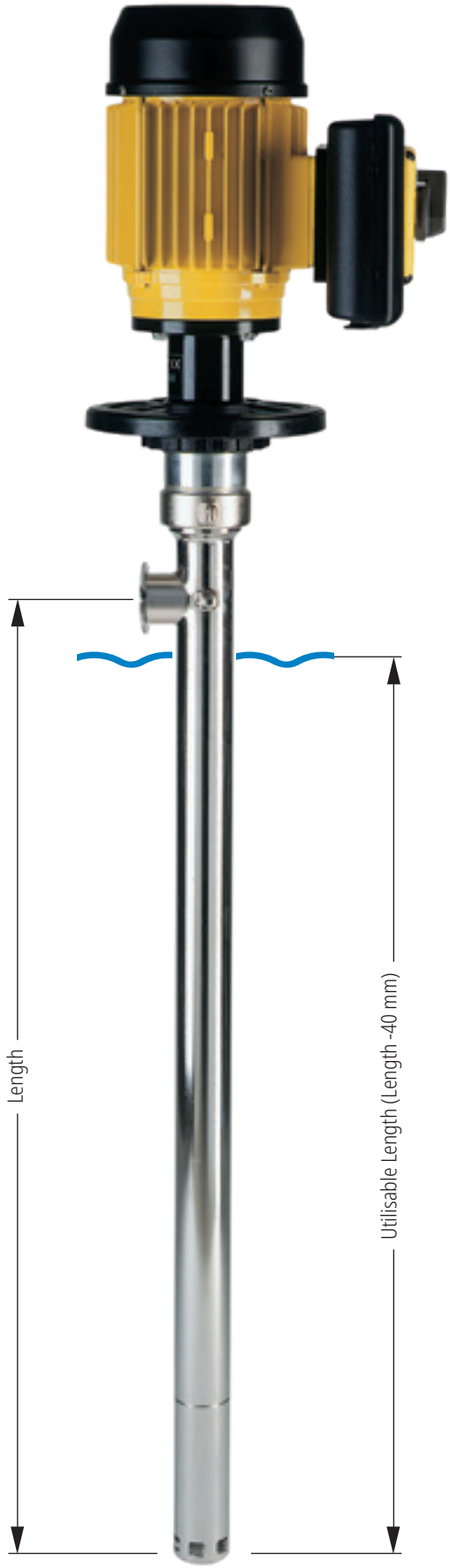

Lutz Eccentric Screw Pumps

Lutz HD-E-SR PURE for viscous foodstuffs

Product detail

Pump tube		HD-E-SR PURE
Category 1 / 2 (acc. to ATEX)		no
Immersion tube diameter:	up to mm	41
Delivery rate:	up to l/min.	17
Delivery head:	up to bar	6
Temperature of medium:	up to °C	100
Material:	Pump tube Stator	Stainless steel (1.4571) PTFE
Pressure joint:	Tri-Clamp DN	32
Weight:	kg	4,5
Length: 1000 mm* seal FPM	Order No.	**0155-023**
Length: 1000 mm* seal EPDM	Order No.	**0155-024**

*The lenght complies approx. to dimension C in the dimension table. Special lengths 600–1500 mm on request

Choice of motors

Universal motors non-ex. proof	MI 4	MI 4-E	MA II 3	MA II 5	MA II 7
Type Protection type/Weight	500 W, 230 V IP 24 2.8 kg without speed controller	500 W, 230 V IP 24 2.8 kg with speed controller	460 W, 230 V IP 54 4.6 kg	575 W, 230 V IP 54 5.4 kg	795 W, 230 V IP 54 6.6 kg
Order No. (without low-voltage release)	**0030-000**	**0030-001**	**0060-000**	**0060-001**	**0060-002**
Order No. (with low-voltage release)	**–**	**–**	**0060-008**	**0060-009**	**0060-010**

Compressed air motors	MD1xL	MD2xL
Type Operating pressure: Weight	1000 W 6 bar 1,0 kg	1000 W 6 bar 1,4 kg
Order No.	**0004-725**	**0004-735**

for viscosities from 500 to 30,000 mPas

Materials (coming into contact with the pumped medium)

Version:	HD-E-SR PURE FPM	HD-E-SR PURE EPDM
Pump tube:	Stainless steel (1.4571)	Stainless steel (1.4571)
Stator:	PTFE	PTFE
Mechanical seal:	Stainless steel/Carbon/FPM	Stainless steel/Carbon/EPDM
Secondary seal:	FPM	EPDM
Drive shaft:	Stainless steel (1.4571)	Stainless steel (1.4571)

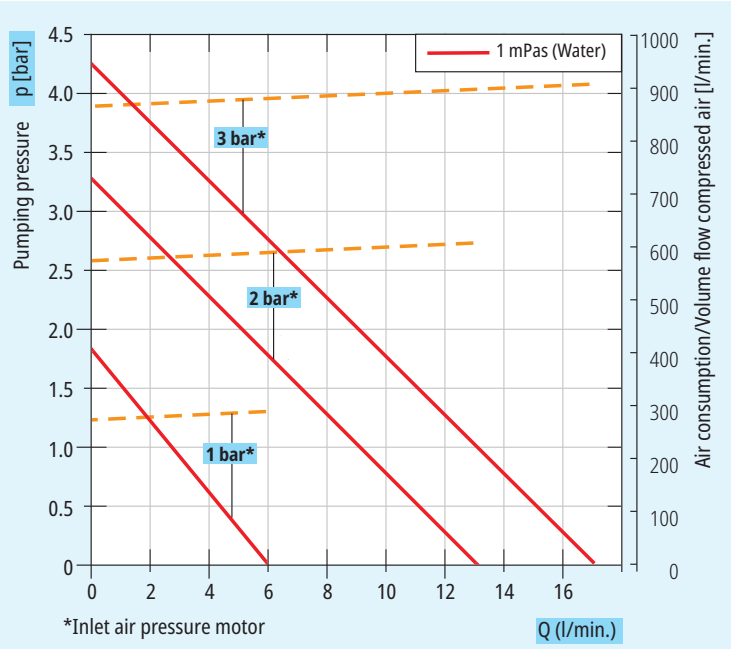

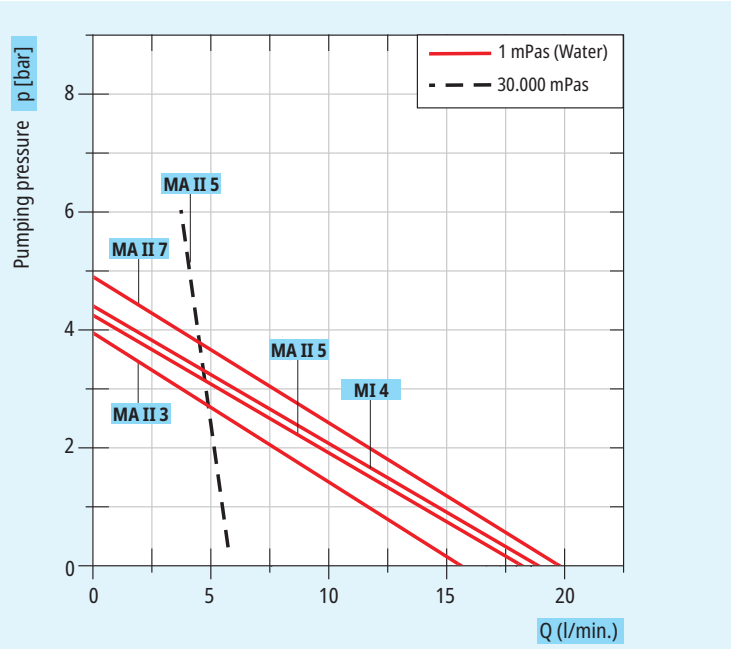

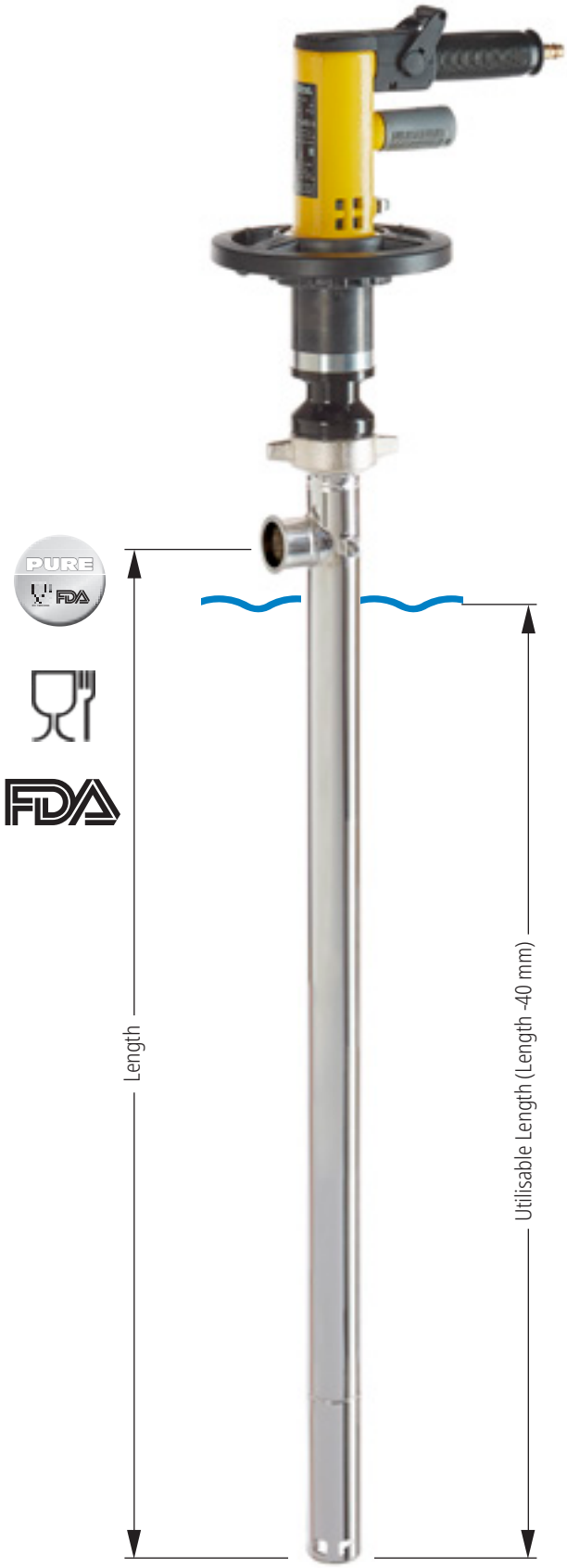

Lutz Eccentric Screw Pumps

B70V-SR 12.1, 25.1 and 50.1 PURE for viscous foodstuffs

Product detail

Pump tubes			B70V-SR PURE					
Size			**12.1**	**12.1**	**25.1**	**25.1**	**50.1**	**50.1**
Category 1 / 2 (acc. to ATEX)			no	yes	no	yes	no	yes
Seal	Packing gland Mechanical seal	(St) (MS)	MS	MS	MS	MS	MS	MS
Drive shaft	Torsion shaft Universal joint shaft	(TS) (UJ)	TS	UJ	TS	UJ	TS	UJ
Delivery rate*		up to l/min.	12	12	25	25	50	50
Delivery head*		up to bar	6	6	8	8	8	8
Temp. of medium**		up to °C	140	140	140	140	140	140
Material pump tube			1.4571/1.4404	1.4571/1.4404	1.4571/1.4404	1.4571/1.4404	1.4571/1.4404	1.4571/1.4404
Material stator			PTFE	PTFE	PTFE	PTFE	PTFE	PTFE
Immersion tube diameter		mm	54	54	54	54	54	54
Pressure joint		Tri-Clamp DN	50	50	50	50	50	50
Weight		kg	7	7	7	7	7	7
Length***		mm	1000	1000	1000	1000	1100	1100
Order No. PURE FPM			**0174-014_00002**	**0174-024_00001** ●	**0174-134_00005**	**0174-144_00003** ●	**0174-514_00004**	**0174-524_00004** ●
Order No. PURE EPDM			**on request**	**0174-024_00002** ●	**0174-134_00004**	**0174-144_00002** ●	**0174-514_00003**	**0174-524_00005** ●

* Determined with water at 20 °C, three-phase motor (900 rpm) and elastomer stator
** with PTFE Stator (the medium temperature of explosion proof eccentric screw pumps B70 may not exceed 100°C)
*** The lenght complies approx. to dimension C in the dimension table. Special length 500 - 2000 mm on request (version with joint shaft only)

● Explosion proof eccentric screw pump approved category 1 / 2 (acc. to ATEX) for pumping flammable liquids of the explosion group IIA and temperature class T4

Choice of motors

Universal motors non-ex. proof	MI 4	MI 4-E	MA II 3	MA II 5	MA II 7
Type Protection type/Weight	500 W, 230 V IP 24 2.8 kg without speed controller	500 W, 230 V IP 24 2.8 kg with speed controller	460 W, 230 V IP 54 4.6 kg	575 W, 230 V IP 54 5.4 kg	795 W, 230 V IP 54 6.6 kg
Order No. (without low-voltage release)	**0030-000**	**0030-001**	**0060-000**	**0060-001**	**0060-002**
Order No. (with low-voltage release)	**–**	**–**	**0060-008**	**0060-009**	**0060-010**

Universal motors ex. proof	ME II 3	ME II 5	ME II 7	ME II 8
Type Protection type/Weight	460 W, 230 V IP 54 5.5 kg	580 W, 230 V IP 54 6.3 kg	795 W, 230 V IP 54 7.5 kg	930 W, 230 V IP 54 8 kg
Order No. (with low-voltage release)	**0050-000**	**0050-001**	**0050-002**	**0050-042**
Order No. (without low-voltage release)	**0050-016**	**0050-017**	**0050-018**	**0050-041**

Compressed air motors	MD1xL	MD2xL
Type Operating pressure: Weight	1000 W 6 bar 1.0 kg	1000 W 6 bar 1.4 kg infinitely variable speed
Order No.	**0004-725**	**0004-735**

B70V-SR 12.1, 25.1 and 50.1 PURE

for viscosities from 1 - 100,000 mPas (Compressed air motors)
1 - 30,000 mPas (Universal motors)

Materials **(coming into contact with the pumped medium):**

Version:	B70V-SR PURE PTFE/FPM	B70V-SR PURE PTFE/EPDM
Housing:	Stainless steel (1.4571/1.4404)	Stainless steel (1.4571/1.4404)
Rotor:	Stainless steel (1.4571)	Stainless steel (1.4571)
Seals:	FPM	EPDM
Mechanical seal: Torsion shaft Universal joint shaft	 WC/SiC/FPM WC/WC/FPM	 WC/SiC/EPDM WC/WC/EPDM
Drive shaft:	Stainless steel (1.4571)	Stainless steel (1.4571)
Stator material:	PTFE	PTFE

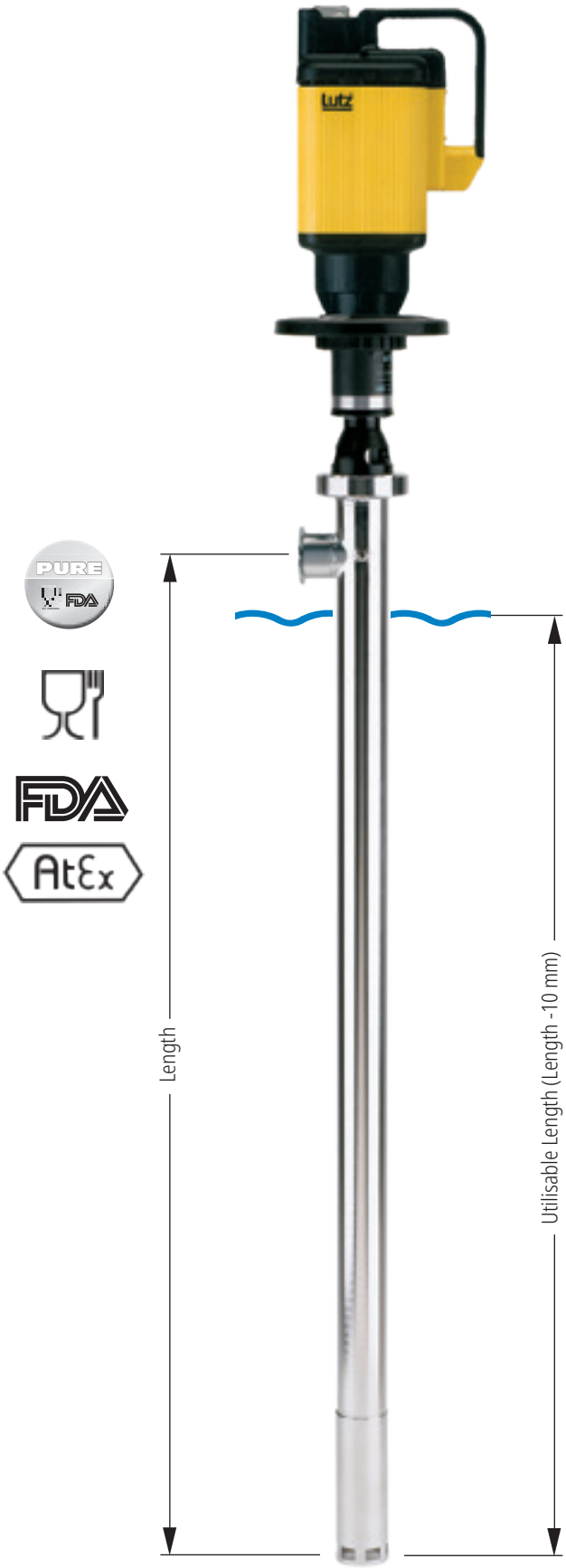

Important Information!

When pumping in „Zone O“ areas or pumping flammable liquids only pumps with mechanical seal, universal joint shaft and PTFE stator are approved.

Viscosity range from aqueous to fluidity range.
Medium table with liquid examples see chemical resistance table.

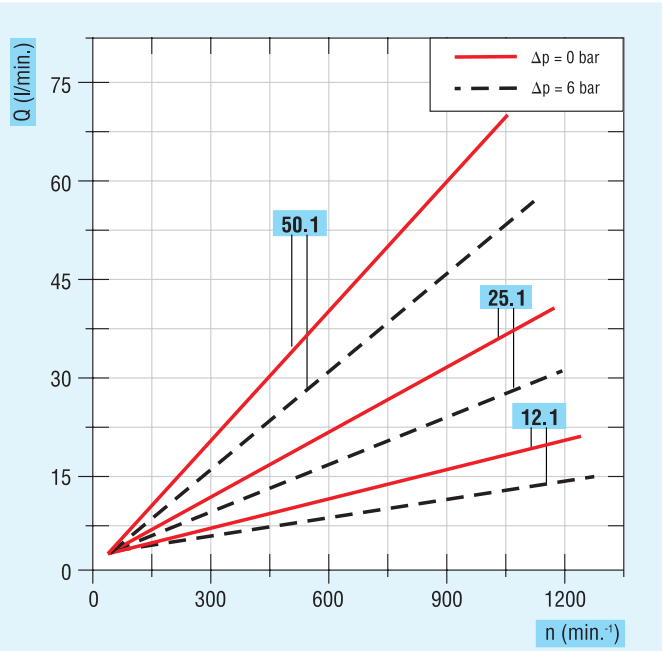

Lutz Eccentric Screw Pumps

B70V 12.1 and 25.1 PURE for viscous foodstuffs

Product detail

Pump tubes			B70V PURE			
Size			**12.1**	**12.1**	**25.1**	**25.1**
Category 1 / 2 (acc. to ATEX)			no	yes	no	yes
Seal	Mechanical seal	(MS)	MS	MS	MS	MS
Drive shaft	Torsion shaft Universal joint shaft	(TS) (UJ)	TS	UJ	TS	UJ
Delivery rate*		up to l/min.	12	12	25	25
Delivery head*		up to bar	6	6	8	8
Temp. of medium**		up to °C	140	140	140	140
Material pump tube			1.4571/1.4404	1.4571/1.4404	1.4571/1.4404	1.4571/1.4404
Material stator			PTFE	PTFE	PTFE	PTFE
Immersion tube diameter		mm	54	54	54	54
Pressure joint		Tri-Clamp DN	50	50	50	50
Weight		kg	7	7	7	7
Length***		mm	1000	1000	1000	1000
Order No. PURE FPM			**on request**	**0173-014_00003** ●	**0172-124_00007**	**0173-134_00010** ●
Order No. PURE EPDM			**on request**	**on request** ●	**0172-124_00006**	**0173-134_00009** ●

* Determined with water at 20 °C, three-phase motor (900 rpm) and elastomer stator
** with PTFE Stator (the medium temperature of explosion proof eccentric screw pumps B70 may not exceed 100°C)
*** The lenght complies approx. to dimension C in the dimension table. Special length 500 - 2000 mm on request (version with joint shaft only)

● Explosion proof eccentric screw pump approved category 1 / 2 (acc. to ATEX) for pumping flammable liquids of the explosion group IIA and temperature class T4

Motor selection

Three-phase motor 230/400 V, 50 Hz, Energy efficiency class IE 3 in accordance with EU regulations 640/2009 and 04/2014.

Special voltages, frequencies, protection types as well as higher explosion proof protection classes on request.

Motors with cable terminal box			
Version	0.75 kW, 900 1/min.	1.1 kW, 700 1/min.	1.1 kW, 900 1/min.
Protection type/weight	IP 55 16 kg	IP 55 40 kg	IP 55 31 kg
Order No.	**0172-901**	**0172-919**	**0172-903**

Motors with protection switch			
Version	0.75 kW, 900 1/min.	1.1 kW, 700 1/min.	1.1 kW, 900 1/min.
Protection type/weight	IP 55 22 kg	IP 55 40 kg	IP 55 32 kg
Order No.	**0172-900**	**0172-918**	**0172-902**

Motors, explosion proof		
Version	0.55 kW, 900 1/min.	0.95 kW, 900 1/min.
Marking	II 2 G Ex e II T3	II 2 G Ex e II T3
Protection type/weight	IP 55 17 kg	IP 55 25 kg
Order No.	**0172-804**	**0172-816**

Motor with frequency converter		
Version	0.75 kW, 180-900 1/min.	1.5 kW, 180-900 1/min.
Protection type/weight	IP 55 37 kg	IP 55 35 kg
Order No.	**0172-914**	**0172-913**

B70V 12.1 and 25.1 PURE

for viscosities from 1 - 100,000 mPas

Materials **(coming into contact with the pumped medium):**

Version:	B70V PURE PTFE/FPM	B70V PURE PTFE/EPDM
Housing:	Stainless steel (1.4571/1.4404)	Stainless steel (1.4571/1.4404)
Rotor:	Stainless steel (1.4571)	Stainless steel (1.4571)
Seals:	FPM	EPDM
Mechanical seal: Torsion shaft Universal joint shaft	 WC/SiC/FPM WC/WC/FPM	 WC/SiC/EPDM WC/WC/EPDM
Drive shaft:	Stainless steel (1.4571)	Stainless steel (1.4571)
Stator material:	PTFE	PTFE

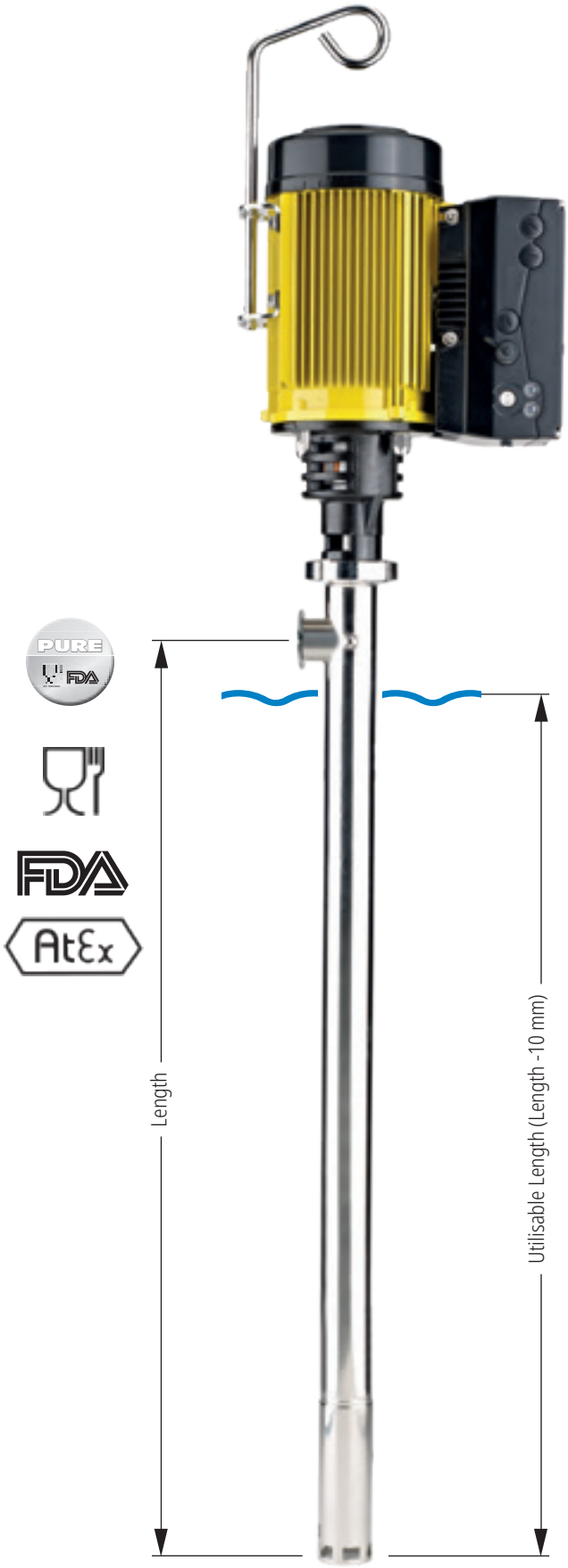

Important Information!

When pumping in „Zone O“ areas or pumping flammable liquids only pumps with mechanical seal, universal joint shaft and PTFE stator are approved.

Viscosity range from aqueous to fluidity range.
Medium table with liquid examples see chemical resistance table.

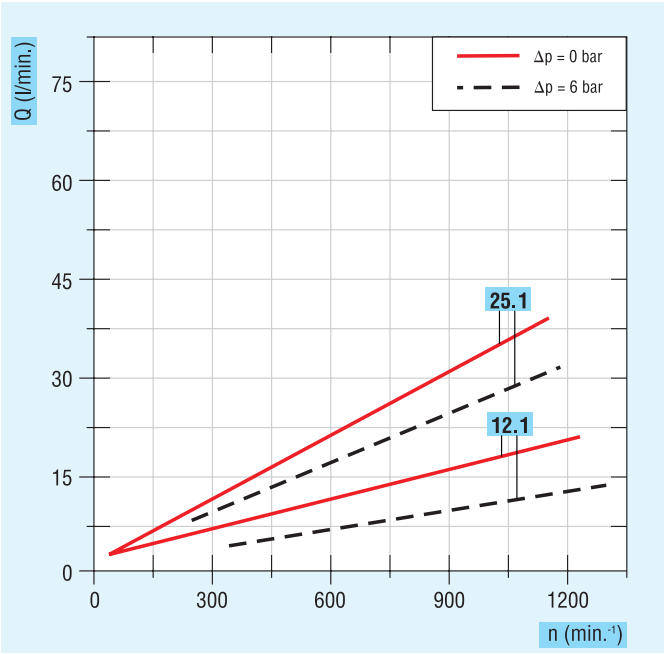

Lutz Eccentric Screw Pumps

B70V 25.2 PURE for viscous foodstuffs

Product detail

Pump tubes			B70V PURE	
Size			**25.2**	**25.2**
Category 1 / 2 (acc. to ATEX)			no	yes
Seal	Packing gland Mechanical seal	(St) (MS)	MS	MS
Drive shaft	Torsion shaft Universal joint shaft	(TS) (UJ)	TS	UJ
Delivery rate*		up to l/min.	25	25
Delivery head*		up to bar	10	10
Temp. of medium**		up to °C	140	140
Material pump tube			1.4571/1.4404	1.4571/1.4404
Material stator			PTFE	PTFE
Immersion tube diameter		mm	54	54
Pressure joint		Tri-Clamp DN	50	50
Weight		kg	7	7
Length***		mm	1100	1100
Order No. PURE FPM			**0172-254_00001**	**0173-264_00001** ●
Order No. PURE EPDM			**0172-254_00002**	**on request** ●

* Determined with water at 20 °C, three-phase motor (900 rpm) and elastomer stator
** with PTFE Stator (the medium temperature of explosion proof eccentric screw pumps B70 may not exceed 100°C)
*** The lenght complies approx. to dimension C in the dimension table. Special length 500 - 2000 mm on request (version with joint shaft only)

● Explosion proof eccentric screw pump approved category 1 / 2 (acc. to ATEX) for pumping flammable liquids of the explosion group IIA and temperature class T4

Motor selection

Three-phase motor 230/400 V, 50 Hz, Energy efficiency class IE 3 in accordance with EU regulations 640/2009 and 04/2014.

Special voltages, frequencies, protection types as well as higher explosion proof protection classes on request.

Motors with cable terminal box		
Version	1.1 kW, 900 1/min.	1.1 kW, 700 1/min.
Protection type/weight	IP 55 31 kg	IP 55 40 kg
Order No.	**0172-903**	**0172-919**

Motors with protection switch		
Version	1.1 kW, 900 1/min.	1.1 kW, 700 1/min.
Protection type/weight	IP 54 32 kg	IP 55 40 kg
Order No.	**0172-902**	**0172-918**

Motor, explosion-proof	
Version	0.95 kW, 900 1/min.
Marking	II 2 G Ex e II T3
Protection type/weight	IP 55 25 kg
Order No.	**0172-816**

Motor with frequency converter		
Version	0.75 kW, 180-900 1/min.	1.5 kW, 180-900 1/min.
Protection type/weight	IP 55 37 kg	IP 55 35 kg
Order No.	**0172-914**	**0172-913**

B70V 25.2 PURE

for viscosities from 1 - 100,000 mPas

Materials **(coming into contact with the pumped medium):**

Version:	B70V PURE PTFE/FPM	B70V PURE PTFE/EPDM
Housing:	Stainless steel (1.4571/1.4404)	Stainless steel (1.4571/1.4404)
Rotor:	Stainless steel (1.4571)	Stainless steel (1.4571)
Seals:	FPM	FPM or EPDM
Mechanical seal: Torsion shaft Universal joint shaft	 WC/SiC/FPM WC/WC/FPM	 WC/SiC/EPDM WC/WC/EPDM
Drive shaft:	Stainless steel (1.4571)	Stainless steel (1.4571)
Stator material:	PTFE	PTFE

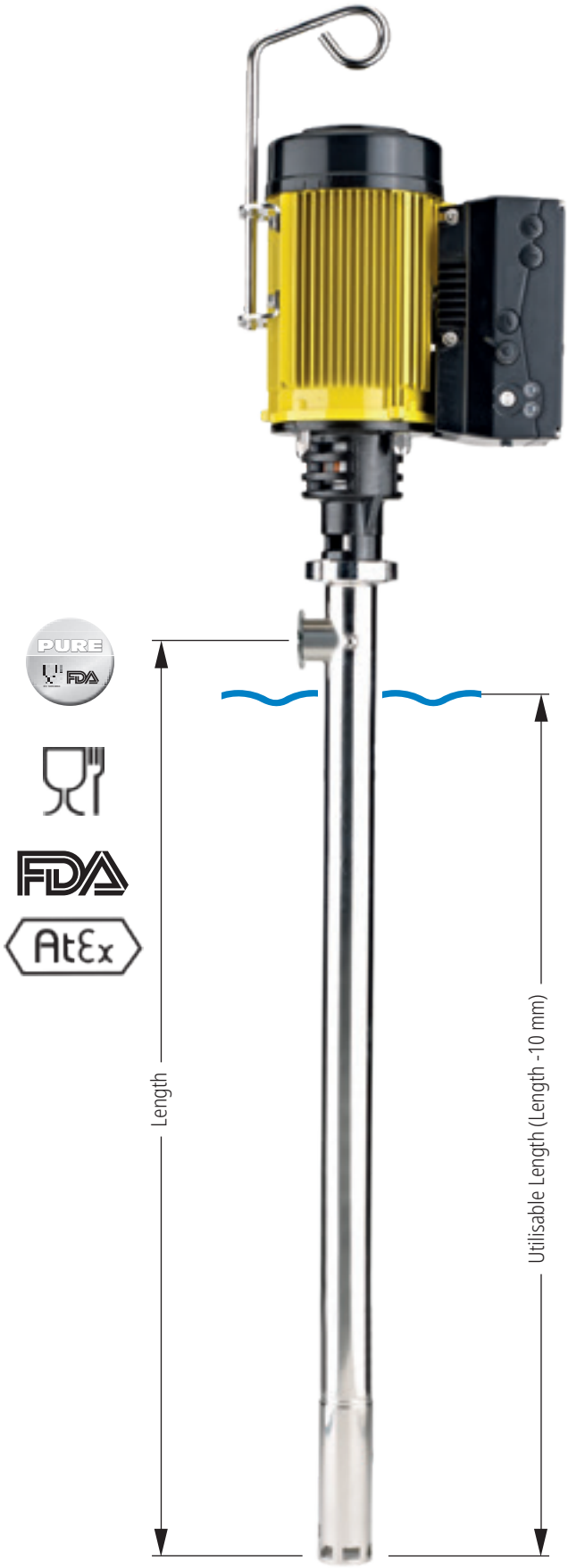

Important Information!

When pumping in „Zone O“ areas or pumping flammable liquids only pumps with mechanical seal, universal joint shaft and PTFE stator are approved.

Viscosity range from aqueous to fluidity range.
Medium table with liquid examples see chemical resistance table.

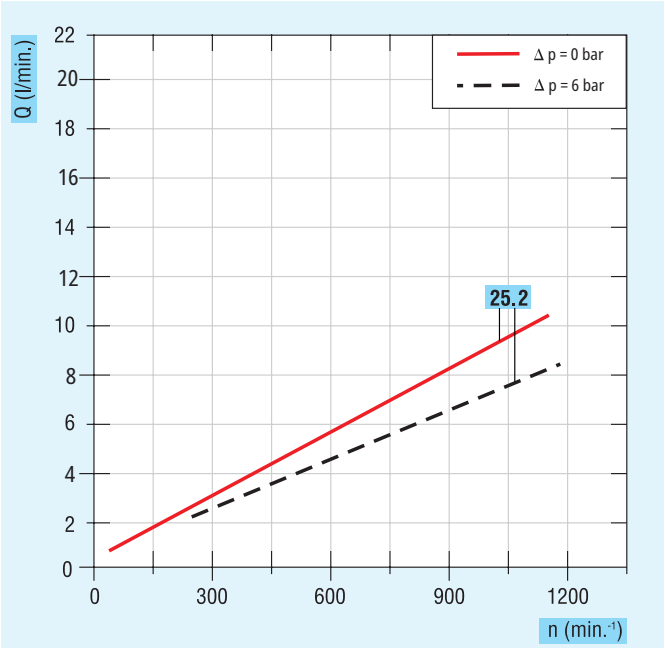

Lutz Eccentric Screw Pumps

B70V 50.1 and 75.1 PURE for viscous foodstuffs

Product detail

Pump tubes			B70V PURE		
Size			**50.1**	**50.1**	**75.1**
Category 1 / 2 (acc. to ATEX)			no	yes	no
Seal	Packing gland Mechanical seal	(St) (MS)	MS	MS	MS
Drive shaft	Torsion shaft Universal joint shaft	(TS) (UJ)	TS	UJ	UJ
Delivery rate*		up to l/min.	50	50	75
Delivery head*		up to bar	6	8	8
Temp. of medium**		up to °C	140	140	140
Material pump tube			1.4571/1.4404	1.4571/1.4404	1.4571/1.4404
Material stator			PTFE	PTFE	PTFE
Immersion tube diameter		mm	54	54	54
Pressure joint		Tri-Clamp DN	50	50	50
Weight		kg	7	7	7
Length***		mm	1100	1100	1100
Order No. PURE FPM			**0172-504_00002**	**0173-514_00004** ●	**0173-564_00010**
Order No. PURE EPDM			**0172-504_00001**	**0173-514_00005** ●	**on request**

* Determined with water at 20 °C, three-phase motor (900 rpm) and elastomer stator
** with PTFE Stator (the medium temperature of explosion proof eccentric screw pumps B70 may not exceed 100°C)
*** The lenght complies approx. to dimension C in the dimension table. Special length 500 - 2000 mm on request (version with joint shaft only)

● Explosion proof eccentric screw pump approved category 1 / 2 (acc. to ATEX) for pumping flammable liquids of the explosion group IIA and temperature class T4

Motor selection

Three-phase motor 230/400 V, 50 Hz, Energy efficiency class IE 3 in accordance with EU regulations 640/2009 and 04/2014.

Special voltages, frequencies, protection types as well as higher explosion proof protection classes on request.

Motors with cable terminal box		
Version	1.1 kW, 700 1/min.	1.1 kW, 900 1/min.
Protection type/weight	IP 55 40 kg	IP 55 31 kg
Order No.	**0172-919**	**0172-903**

Motors with protection switch		
Version	1.1 kW, 700 1/min.	1.1 kW, 900 1/min.
Protection type/weight	IP 55 40 kg	IP 55 32 kg
Order No.	**0172-918**	**0172-902**

Motor, explosion-proof	
Version	0.95 kW, 900 1/min.
Marking	II 2 G Ex e II T3
Protection type/weight	IP 55 25 kg
Order No.	**0172-816**

Motor with frequency converter	
Version	1.5 kW, 180-900 1/min.
Protection type/weight	IP 55 35 kg
Order No.	**0172-913**

B70V 50.1 and 75.1 PURE

for viscosities from 1 - 100,000 mPas

Materials **(coming into contact with the pumped medium):**

Version:	B70V PURE PTFE/FPM	B70V PURE PTFE/EPDM
Housing:	Stainless steel (1.4571/1.4404)	Stainless steel (1.4571/1.4404)
Rotor:	Stainless steel (1.4571)	Stainless steel (1.4571)
Seals:	FPM	EPDM
Mechanical seal: Torsion shaft Universal joint shaft	 WC/SiC/FPM WC/WC/FPM	 WC/SiC/EPDM WC/WC/EPDM
Drive shaft:	Stainless steel (1.4571)	Stainless steel (1.4571)
Stator material:	PTFE	PTFE

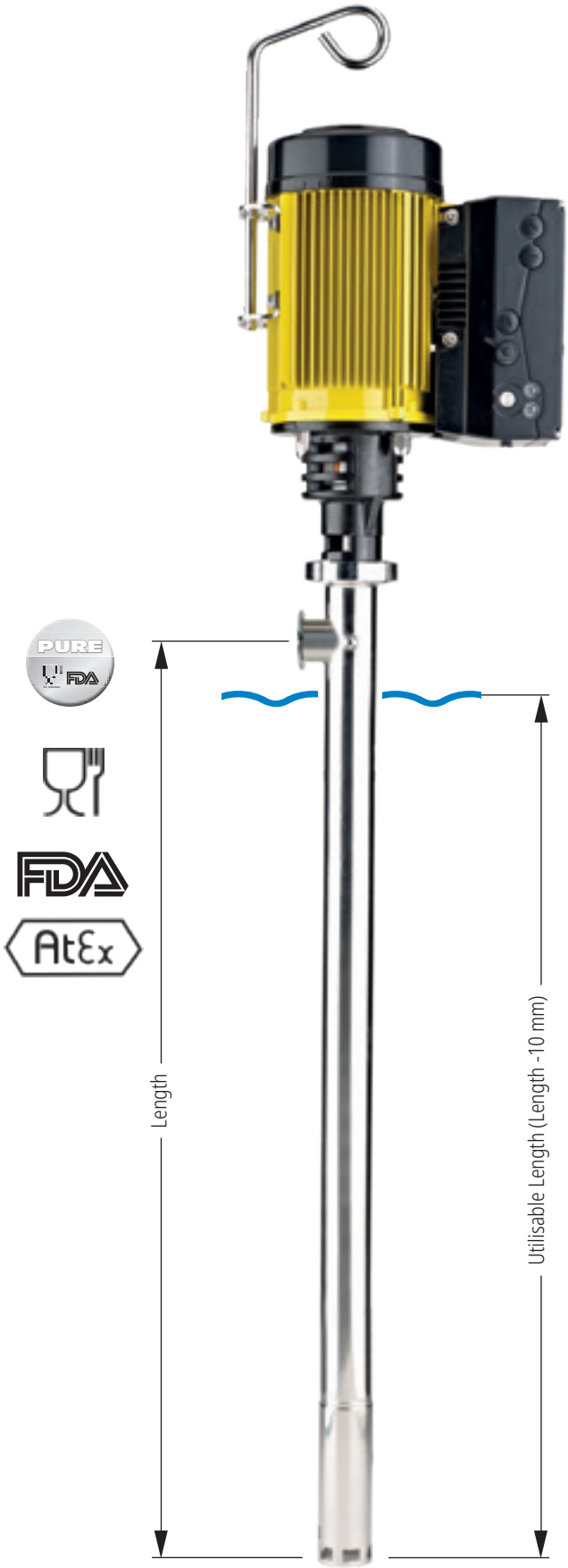

Important Information!

When pumping in „Zone O“ areas or pumping flammable liquids only pumps with mechanical seal, universal joint shaft and PTFE stator are approved.

Viscosity range from aqueous to fluidity range.
Medium table with liquid examples see chemical resistance table.

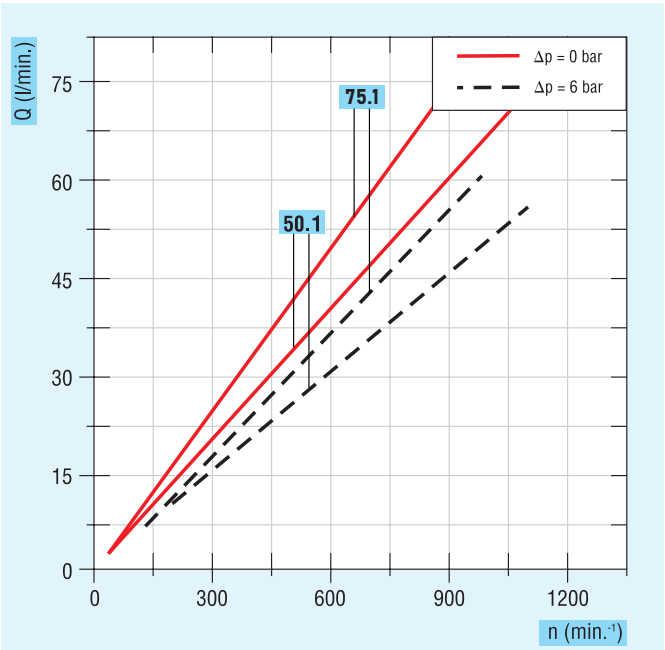

Lutz Eccentric Screw Pumps

B70V 120.1 PURE for viscous and pasty foodstuffs

Product detail

Pump tubes		B70V PURE
Size		**120.1**
Category 1 / 2 (acc. to ATEX)		no
Seal Mechanical seal	(MS)	MS
Drive shaft Universal joint shaft	(UJ)	UJ
Delivery rate*	up to l/min.	120
Delivery head*	up to bar	6
Temp. of medium	up to °C	140
Material pump tube		1.4571
Material stator		PTFE
Pump diameter**	up to mm	131
Pressure joint	Tri-Clamp DN	50
Weight	kg	21
Length***	mm	1100
Order No. PURE FPM		**0175-204_00001**
Order No. PURE EPDM		**0175-204_00010**

* Determined with water at 20 °C, three-phase motor (600 rpm and 700 rpm) and elastomer stator
** required bunghole Ø 133 mm
*** The lenght complies approx. to dimension C in the dimension table. Special length 500 - 2500 mm on request

Choice of motors

Motors with cable terminal box	For B70V - 120.1	
Type Protection type/Weight	2.2 kW, 600 1/min. IP 55 42 kg	3.0 kW, 600 1/min. IP 55 49 kg
Order No.	**0175-802**	**0175-803**

Three-phase motor 230/400 V, 50 Hz,
Energy efficiency class IE 3 in accordance with EU regulations 640/2009 and 04/2014.
Special voltages, frequencies, protection types on request.

B70V 120.1 PURE

for viscosities from 1 - 120.000 mPas

Materials (coming into contact with the pumped medium):

Version:	B70V PURE PTFE/FPM	B70V PURE PTFE/EPDM
Housing:	Stainless steel (1.4571)	Stainless steel (1.4571)
Rotor:	Stainless steel (1.4571)	Stainless steel (1.4571)
Seals:	FPM	EPDM
Mechanical seal:*	WC/WC, FPM	WC/WC, EPDM
Drive shaft:	Stainless steel (1.4571)	Stainless steel (1.4571)
Stator material:	PTFE	PTFE

* Mechanical seal pairing on request.

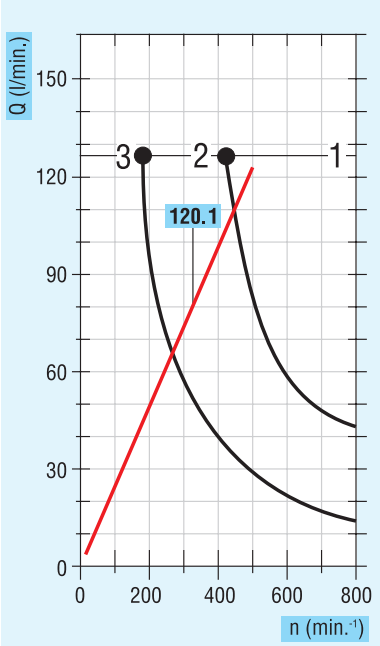

Range 1:

Thin-bodied and lubricating fluids such as wine, milk, oils etc.
η < 7000 mPas

Range 2:

Abrasive and viscous fluids such as pulps, adhesives, paints, inks, etc.
η < 20,000 mPas

Range 3:

Very abrasive and highly viscous fluids such as honey, greases, syrups, etc.
η > 20,000 mPas

Viscosity range:

Up to limit of flowabilty

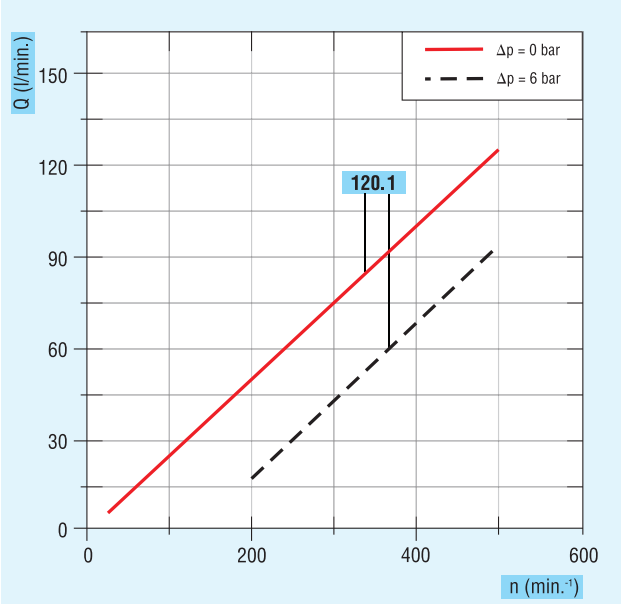

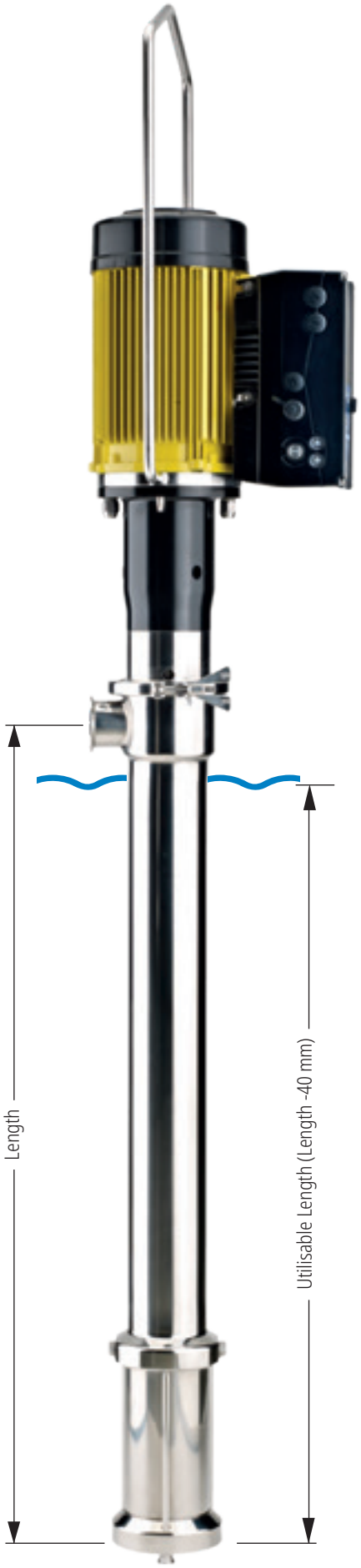

FDA-conform Double Diaphragm Pump

DMP 1/2”-1” Made of plastic and metal

Versatile and variable pump, ideal for corrosive and neutral aqueous to slightly viscous fluids in the production and processing of food products.

Other accessories for food and beverages

In order to ensure a reliable filling process, the hoses, nozzles and curved spouts meet the requirements of the food and beverage industry.

Certified Quality

All materials used have been tested and conform to the required standards.
Our high quality standards are certified by a declaration of conformity.

Lutz Flow Meter

TS VA10 SS in PURE Version

The VA10 SS PURE flow measurement device with touch screen display and backlighting is very impressive thanks to its simple, practical display and user-friendly operation, multi-language interface and compact construction.
The user guide with instructions in plain text, system reporting and assistance texts as well as safety and monitoring functions virtually eliminate the possibility of errors. It can also be operated manually or by external control.

- + Precise volume detection of liquid food products and raw materials
- + Practical display and user-friendly operation
- + User-error protection
- + High measurement precision thanks to overrun correction
- + Simple calibration
- + Easy installation and starting up
- + External control / data evaluation via standard interfaces

Properties:

- Operates via nutating disc
- Materials in contact with liquids in food quality
- Touch screen display
- Multi-language menu guide
- Instructions in plain text
- Integrated assistance function
- Safety and monitoring functions
- With and without volume preselection
- "Plug & Play" module concept
- Explosion-proof versions approved in accordance with the ATEX Directive 2014/34/EU Category 1/2

Volume preset

A relay module which can be integrated into the metering system automatically shuts off the pump motor and/or solenoid valve once the volume preset has been reached.

Flow measurement without volume preselection - TS

for aqueous, fatty and easily flammable food products

Technical data		Type VA10 PURE	Type VA10 Ex PURE
Field of application		aqueous and fatty food products	easy flammable food products
Flow volume	l/min.	min. 10 – max. 100	min. 10 – max. 100
Temperature	°C	80	60
Viscosity	mPas	5,000	5,000
Operating pressure	bar	10	10
Accuracy		± 1%	± 1%
Inlet and Outlet port		Tri-Clamp DN 32	Tri-Clamp DN 32
LCD display		Touch-Screen 63x63 mm, 128x128 pixels, display sub-total and total volume can be reset	
Menue language		DE, GB, ES, FR, IT, NL, PT, RU	
Materials: Housing: Measuring chamber Seals Magnet		 Stainless steel (1.4581/1.4571)* Stainless steel (1.4581/1.4571) PTFE/PVDF FEP PVDF encapsulated	 Stainless steel (1.4581/1.4571)* Stainless steel (1.4581/1.4571) PTFE/PVDF/PE FEP PVDF encapsulated
Marking: Operating unit Basic flow meter		 – –	 II 2G Ex ib IIB T4 Gb** II 2G T4 Gb
Protection class		IP 55	IP 55
Weight	kg	3.7	3.7
Order No.		**0206-006**	**0206-007** ●

* Special materials on requestGeneral information to the chemical resistance of the different flow meters you will find in our chemical resistance list.
** Type of protection II 2G Ex ib IIC T4 Gb on request

Recommended Accessories: Power supply unit NG10***		
Voltage	V	220-240
Frequency	Hz	50-60
Order No.		**0230-230**

*** Limited battery operation without power supply unit possible.

● Suitable for transferring combustible and easy flammable liquids (e.g. ethanol, petrol) or in explosive hazard area.

Flow measurement with volume preselection - TS

for aqueous, fatty and easily flammable food products

Technical data		Type VA10/RM10 PURE	Type VA10/Ex-RM10mK PURE
Field of application		aqueous and fatty food products	easy flammable food products
Flow volume	l/min.	min. 10 – max. 100	min. 10 – max. 100
Temperature	°C	80	40
Viscosity	mPas	5,000	5,000
Operating pressure	bar	10	10
Accuracy		± 1%	± 1%
Inlet and Outlet port		Tri-Clamp DN 32	Tri-Clamp DN 32
LCD display		Touch-Screen 63x63 mm, 128x128 pixels, display sub-total and total volume can be reset	
Menue language		DE, GB, ES, FR, IT, NL, PT, RU	
Materials: Housing: Measuring chamber Seals Magnet		 Stainless steel (1.4581/1.4571)* Stainless steel (1.4581/1.4571) PTFE/PVDF FEP PVDF encapsulated	 Stainless steel (1.4581/1.4571)* Stainless steel (1.4581/1.4571) PTFE/PVDF/PE FEP PVDF encapsulated
Marking: Operating unit Basic flow meter		 – –	 II 2G Ex ib IIB T4 Gb** II 2G T4 Gb
Protection class		IP 55	IP 55
Weight	kg	4.1	6.7
Relay mod.		**RM10 230 V**	**Ex-RM10mK 230 V**
Voltage	V	220-230	220-230
Frequency	Hz	50-60	50-60
Switching outputs		2 switching outputs (potentially bound)	2 switching outputs (potentially bound)
Output 1 (Pump)		8 A, cosφ > 0,7	5 A, cosφ > 0,7
Output 2 (Valve)		0.5 A	0.315 A
Marking		–	II 2G Ex db eb mb [ib] IIC T4 Gb
Order No. basic flow meter▲		**0230-541**	**0230-542 ●**
Order No. operating unit▲		**0230-000**	**0230-010 ●**
Order No. relay module▲		**0230-200**	**0230-211 ●**

* Special materials on request. General information to the chemical resistance of the different flow meters you will find in our chemical resistance list. ** Type of protection II 2G Ex ib IIC T4 Gb on request.

▲ Please choose Order No. basic flow meter + Order No. operating unit + Order No. relay module

● Suitable for transferring combustible and easy flammable liquids (e.g. ethanol, petrol) or in explosive hazard area.

Accessories

Accessories at a glance

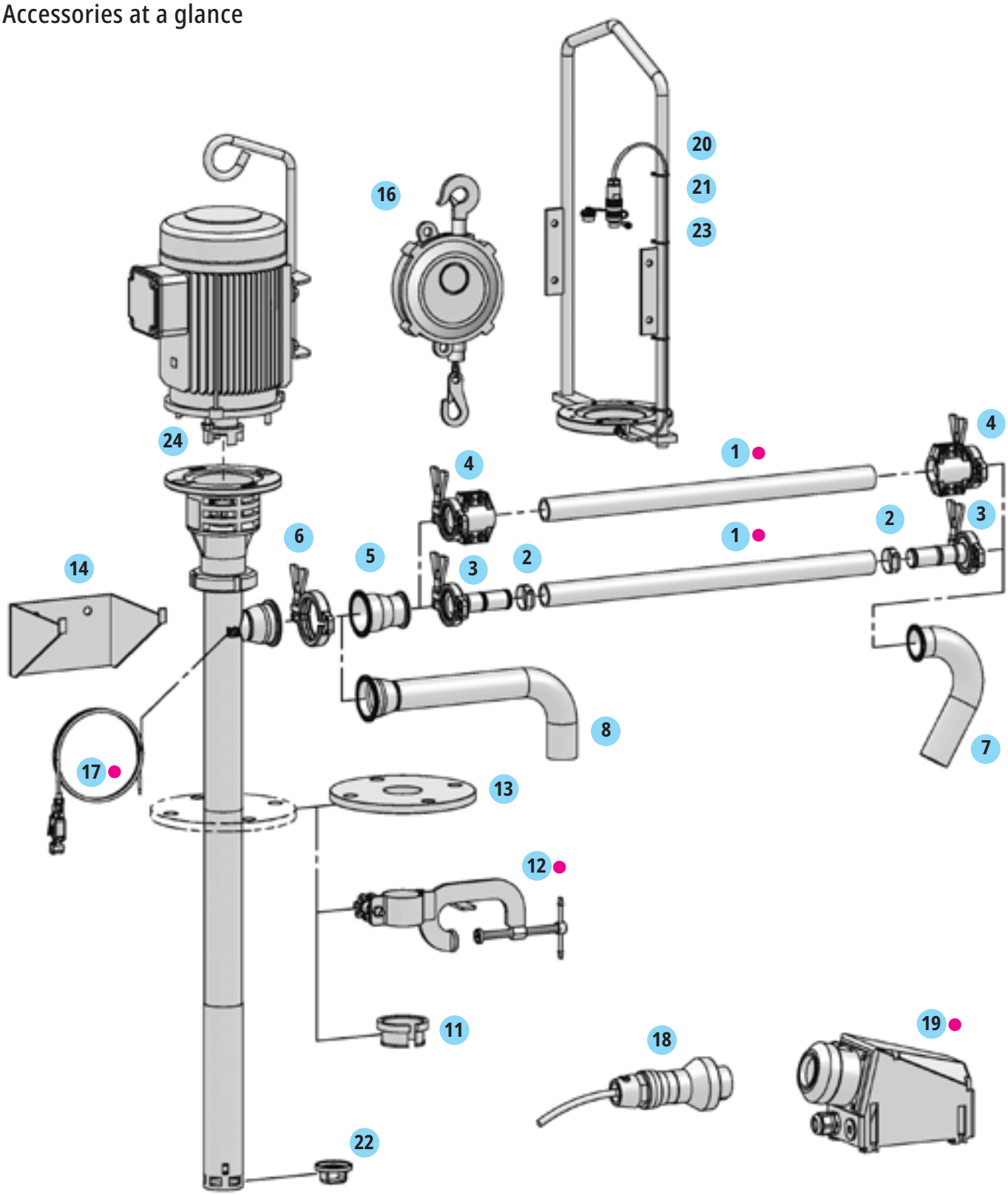

1 ●	Hose	8 ●	Discharge spout	18 ●	Ex-plug
2	Hose clip	11	Drum adapter	19 ●	Ex-socket
3	Hose connection	12	Clamping device	20 ●	Lifting device
4	Hose connector	13	Installation flange	21	Impulse transmitter
5	Tri-Clamp reducing piece	14	Wall bracket	22 ●	Protection device for drum inliner
6	Tri-Clamp locking clamp	16 ●	Balancer	23 ●	Operating unit
7 ●	Discharge spout	17	Equipotential bonding cable	24 ●	Coupling part, motor side

● Suitable for transferring combustible and easy flammable liquids (e.g. ethanol, petrol) or in explosive hazard area.

Specification		Order-No.	Product detail

1 PVC spiral hose, fabric reinforced

Hose for food liquids made of PVC with woven layer and imbedded galvanized steel helix, inside and outside smooth, complies with EU-regulations 10/2011 and 1935/2004.

Operating pressure:	max. 14 bar	
Temperature of medium:	-5 °C up to +65 °C	
Nominal diameter:	Weight:	
DN 25 (1”)	0.67 kg/m	**0374-467**
DN 32 (1 1/4”)	0.80 kg/m	**0374-468**
DN 38 (1 1/2”)	1.15 kg/m	**0374-469**
DN 50 (2”)	1.60 kg/m	**0374-470**

1 Universal chemical hose

Colour coding: “blue/white/blue”.
Suitable for food and luxury foodstuffs, pharmaceuticals, cosmetics and hygiene products. Conform to FDA and USP class VI. Complies with EU-regulations 10/2011 and 1935/2004.
Internal finish: UPE light with spiraled OHM conductive stripes UPE black, smooth, non-bleeding, abrasion-resistant.
Intermediate layer: EPDM conductive (complies with the requirements of the recommendation XXI category 2 of the BfR and FDA standards).
External finish: EPDM light grey, conductive, non-bleeding, ozone- and UV resistant, hardly flammable, (starting from DN 25 with galvanized steel helix, suitable as suction and pressure hose).
Electrically conductive: Type Ω/T (<10^6 Ohm between the fittings, <10^9 Ohm through the hose wall) according to DIN EN 12115:2011.

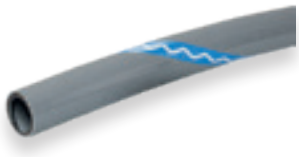

Operating pressure:	max. 16 bar	
Temperature of medium:	-30 up to +100 °C (dependant on the liquid), sterilisable at 130 °C for 30 minutes (open ends)	
Nominal diameter:	Weight:	
DN 25 (1”)	0.8 kg/m	**0374-476** ●
DN 32 (1 1/4”)	0.9 kg/m	**0374-477** ●
DN 38 (1 1/2”)	1.2 kg/m	**0374-478** ●
DN 50 (2”)	1.9 kg/m	**0374-479** ●

2 Hose clips

Stainless steel hose clips with threaded screw for fixing hoses of various nominal bore at the hose connection.

Nominal diameter:	
DN 25 (1”)	**0301-401**
DN 32 - 38 (1 1/4” - 1 1/2”)	**0302-402**
DN 50 (2”)	**0302-403**

Hose bracket

Hose bracket for easy attachment of loose hose ends to the drum or container.

Nominal hose diameter:	
DN 25 (1")	**0204-666**
DN 32 (1 1/4")	**0204-667**

● Suitable for transferring combustible and easy flammable liquids (e.g. ethanol, petrol) or in explosive hazard area.

Accessories

For B70V SanitaryPlus and B70 PURE

Product detail

Caution:
The assembler is responsible for the professional bonding of the hose according to the current Pressure Equipment Directive.

3 Hose connection with Tri-Clamp

For connection of the hose onto the eccentric screw pump B70, discharge spout or Tri-clamp armatures (consisting of hose connector, locking clamp and seal)
Material: Stainless steel (1.4404)

Connection:	for hose with nominal diameter:	Seal:	Order-No.
Tri-Clamp DN 32**	DN 19 (3/4")	EPDM	**0204-870**
Tri-Clamp DN 32**	DN 19 (3/4")	FPM	**0204-871**
Tri-Clamp DN 32**	DN 25 (1")	EPDM	**0204-872**
Tri-Clamp DN 32**	DN 25 (1")	FPM	**0204-873**
Tri-Clamp DN 32**	DN 32 (1 1/4")	EPDM	**0204-874**
Tri-Clamp DN 32**	DN 32 (1 1/4")	FPM	**0204-875**
Tri-Clamp DN 32**	DN 38 (1 1/2")	EPDM	**0204-876**
Tri-Clamp DN 32**	DN 38 (1 1/2")	FPM	**0204-877**
Tri-Clamp DN 50	DN 38 (1 1/2")	EPDM	**0172-746**
Tri-Clamp DN 50	DN 38 (1 1/2")	FPM	**0204-878**

For individual needs, e.g. for connection to on-site Tri-clamp armatures:
Tri-clamp hose connector (1.4404):

DN 32 for hose DN 19	**0370-093**
DN 32 for hose DN 25	**0370-094**
DN 32 for hose DN 32	**0370-095**
DN 32 for hose DN 38	**0370-096**

Tri-clamp locking clamp (1.4408):

DN 25/32/40	**0370-088**

Tri-Clamp Seals:

DN 32. EPDM	**0314-596**
DN 32. FPM	**0314-597**
DN 40, EPDM	**0314-598**
DN 40, FPM	**0314-599**

** If using for eccentric screw pumps B70 an additional reducing piece DN 50 to DN 25/32/40 (Item 5) and a locking clamp (Item. 6) are required.

3 Adapter fitting Tri-Clamp

DN 32 on tube fitting DIN 11851 Rd 58 x 1/6 (DIN 405)	**0172-668**
DN 50 on tube fitting DIN 11851 Rd 78 x 1/6 (DIN 405)	**0172-747**

● Suitable for transferring combustible and easy flammable liquids (e.g. ethanol, petrol) or in explosive hazard area.

Specification	Order-No.

Product detail

4 Hose connector with Tri-clamp

For connection of conductive hose onto the eccentric screw pump B70, discharge spout or Tri-Clamp armatures in explosive hazardous area. The hose connector ensures a highly conduction transition between conductive hose and pump/armature.
The ohmic resistance between the armatures must be lower than 10^6 Ohm.
(Consisting of hose connector, clamp collars, locking clamp and seal)
Material: Stainless steel (1.4404)

Connection:	for hose Nominal diameter:	Seal:	
Tri-Clamp DN 32**	DN 19 (3/4")	EPDM	**0204-860** ●
Tri-Clamp DN 32**	DN 19 (3/4")	FPM	**0204-861** ●
Tri-Clamp DN 32**	DN 25 (1")	EPDM	**0204-862** ●
Tri-Clamp DN 32**	DN 25 (1")	FPM	**0204-863** ●
Tri-Clamp DN 32**	DN 32 (1 1/4")	EPDM	**0204-864** ●
Tri-Clamp DN 32**	DN 32 (1 1/4")	FPM	**0204-865** ●
Tri-Clamp DN 40**	DN 38 (1 1/2")	EPDM	**0204-866** ●
Tri-Clamp DN 40**	DN 38 (1 1/2")	FPM	**0204-867** ●
Tri-Clamp DN 50*	DN 50 (2")	EPDM	**0204-868** ●
Tri-Clamp DN 50*	DN 50 (2")	FPM	**0204-869** ●

*Can also be used for non-Ex applications in conjunction with PVC spiral hose, fabric-reinforced and universal chemical hose (item 1).

For individual needs, e.g. for connection to on-site Tri-clamp armatures:
Tri-clamp hose connector (1.4404):

DN 32 for hose DN 19	**0300-174**
DN 32 for hose DN 25	**0300-175**
DN 32 for hose DN 32	**0300-176**
DN 40 for hose DN 38	**0300-177**
DN 50 for hose DN 50	**0300-178**

Clamp collar (1.4408):

DN 19	**0300-180**
DN 25	**0300-181**
DN 32	**0300-182**
DN 38	**0300-183**
DN 50	**0300-184**

Tri-Clamp locking clamp (1.4408):

DN 25/32/40	**0370-088**
DN 50	**0370-084**

Tri-Clamp Seals:

DN 32. EPDM	**0314-596**
DN 32. FPM	**0314-597**
DN 40, EPDM	**0314-598**
DN 40, FPM	**0314-599**
DN 50, EPDM	**0314-590**
DN 50, FPM	**0314-591**

** If using for eccentric screw pumps B70 an additional reducing piece DN 50 to DN 25/32/40 (Item 5) and a locking clamp (Item. 6) are required.

Hose set B70V-SR Cleaning

For the cleaning/flushing process of the B70 eccentric screw pumps series SR.
The reduced diameter of the hose fitting increases the counter pressure when flushing the pump and thus keeps the SR gear within an appropriate speed range.

Consisting of:
1.5 m universal chemical hose 1/2", clamp collar DN 15,
reducing piece from DN 40 to DN 10 with Tri-Clamp DN 50 **0205-812** ●

● Suitable for transferring combustible and easy flammable liquids (e.g. ethanol, petrol) or in explosive hazard area.

Accessories

For B70V SanitaryPlus and B70 PURE

Product detail	Specification	Order-No.
	5 Tri-Clamp reducing piece Suitable for connection of Tri-Clamp armatures DN 25/32/40 to a Tri-Clamp DN 50 connecting piece. Material: Stainless steel (1.4408) DN 50 onto DN 25/32/40	**0300-185** ●
	6 Tri-Clamp locking clamp Suitable for connection of armatures DN 50 to a connecting piece DN 50. Material: Stainless steel (1.4408) incl. seal. DN 50, Seal EPDM DN 50, Seal FPM	 **0172-745** ● **0204-477** ●
	7 Discharge spout For mounting at the end of the hose for direct filling and transfer-ring in containers incl. seal and clamp. Material: Stainless steel (1.4301/EPDM) Tri-Clamp DN 32 Tri-Clamp DN 40	 **0370-098** ● **0370-099** ●
	8 Discharge spout For mounting at the end of the hose for direct filling and transfer-ring in containers incl. seal and clamp. Material: Stainless steel (1.4571. 1.4404/EPDM). Tri-Clamp DN 50	 **0172-748** ●
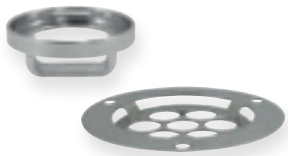	**22 Protection device for drum inliner** For mounting onto the pump foot. Protects sensitive drum inliner and bags from damage. For pump tube B70V-H SanitaryPlus For pump tube B70V 120.1	 **0173-819** ● **0175-332**
	11 Drum adapter in PP For fixing the eccentric screw pump B70 in the drum opening. For pump tube Ø 52-54 mm Universal for all current drum and bunghole openings	 **0208-056**
	12 Clamping device SS (1.4571) To fasten the eccentric screw pump B70 in open-topped drums and containers. For pump tube Ø 52-54 mm	 **0205-052** ●
	13 Installation flange SS (1.4571) For fixing the eccentric screw pump B70 according to DIN 2573, DN 50, PN 6, to a companion flange. The flange is welded onto the pump tube. For pump tube Ø 52-54 mm	 **0170-310**
	14 Wall bracket For safe storage of the eccentric screw pump B70 when not in use. for B70V for B70V-SR	 **0204-309** **0204-307**

● Suitable for transferring combustible and easy flammable liquids (e.g. ethanol, petrol) or in explosive hazard area.

Specification		Order-No.	Product detail

16 Balancer

for eccentric screw pumps, with infinitely adjustable load balancer for easy lifting and moving of the pump

Load bearing capacity: 18-22 kg	Tackle: 2 m	**0371-013**
Load bearing capacity: 22-25 kg	Tackle: 2 m	**0371-014**
Load bearing capacity: 25-30 kg	Tackle: 2 m	**0371-015**
Load bearing capacity: 45-55 kg	Tackle: 2 m	**0371-028**

17 Equipotential bonding cable

Serves to create electrically conductive connection between explosion proof pump and container as earthing and equipontential bonding function.

2 m long with fastening clip		**0204-994** ●
2 m long with two fastening clips	for B70V-H Sanitary	**0204-992** ●

18 Ex-plug

Ensures the safe mains connection of the pump in explosive hazardous areas.
CEE round plug in accordance with II 2G Ex db eb IIC T6 Gb, splash proof in compliance with IP 65.

3-pole (alternating current) CEAG	for B70V-SR (Ex)	**0336-536** ●
3-pole (alternating current) STAHL	for B70V-SR (Ex)	**0336-540** ●
5-pole (three phase current) CEAG	for B70V (Ex)	**0336-537** ●
5-pole (three phase current) STAHL	for B70V (Ex)	**0336-541** ●

19 Ex-socket

Ensures the safe mains connection of the pump in explosive hazardous areas.
CEE-socket in accordance with II 2G Ex db eb IIC T6 Gb, splash proof in compliance with IP 65.

3-pole (alternating current) CEAG	for B70V-SR (Ex)	**0336-531** ●
3-pole (alternating current) STAHL	for B70V-SR (Ex)	**0336-542** ●
5-pole (three phase current) CEAG	for B70V (Ex)	**0336-420** ●
5-pole (three phase current) STAHL	for B70V (Ex)	**0336-543** ●

23 Motor protective switch for motor B70V (Ex)

Explosion proof according to II 2G Ex de IIC T6 with thermal and electromagnetic trip, protection type IP 66. A lifting device and two cable protective coverings are necessary for the mounting.

Ex, 1.6 - 2.5 A	**0335-414** ●
Ex, 2.5 - 4.0 A	**0335-419** ●
Ex, 4.0 - 6.3 A	**0335-420** ●

24 Coupling part, motor side

When sourcing your own motor please order the correct coupling to suit the relative shaft diameter.

Shaft diameter:	ø 14 mm	**0302-028**
	ø 19 mm	**0302-027** ●
	ø 24 mm	**0302-026**
	ø 28 mm (only in combination with intermediate flange)	**0302-029**
	ø 24 mm	**0302-215** ●
Intermediate flange for	ø 28 mm	**0172-850**

20 Lifting device

To simplify the process of lifting the pump in and out of drums or containers.
When using an explosion proof driving motor the Ex-protective plug is mounted onto the lifting device.

for pump tube HD-E	**0155-154**
for B70V-SR with universal motor	**0174-607**

● Suitable for transferring combustible and easy flammable liquids (e.g. ethanol, petrol) or in explosive hazard area.

Accessories

For PURE drum and container pumps

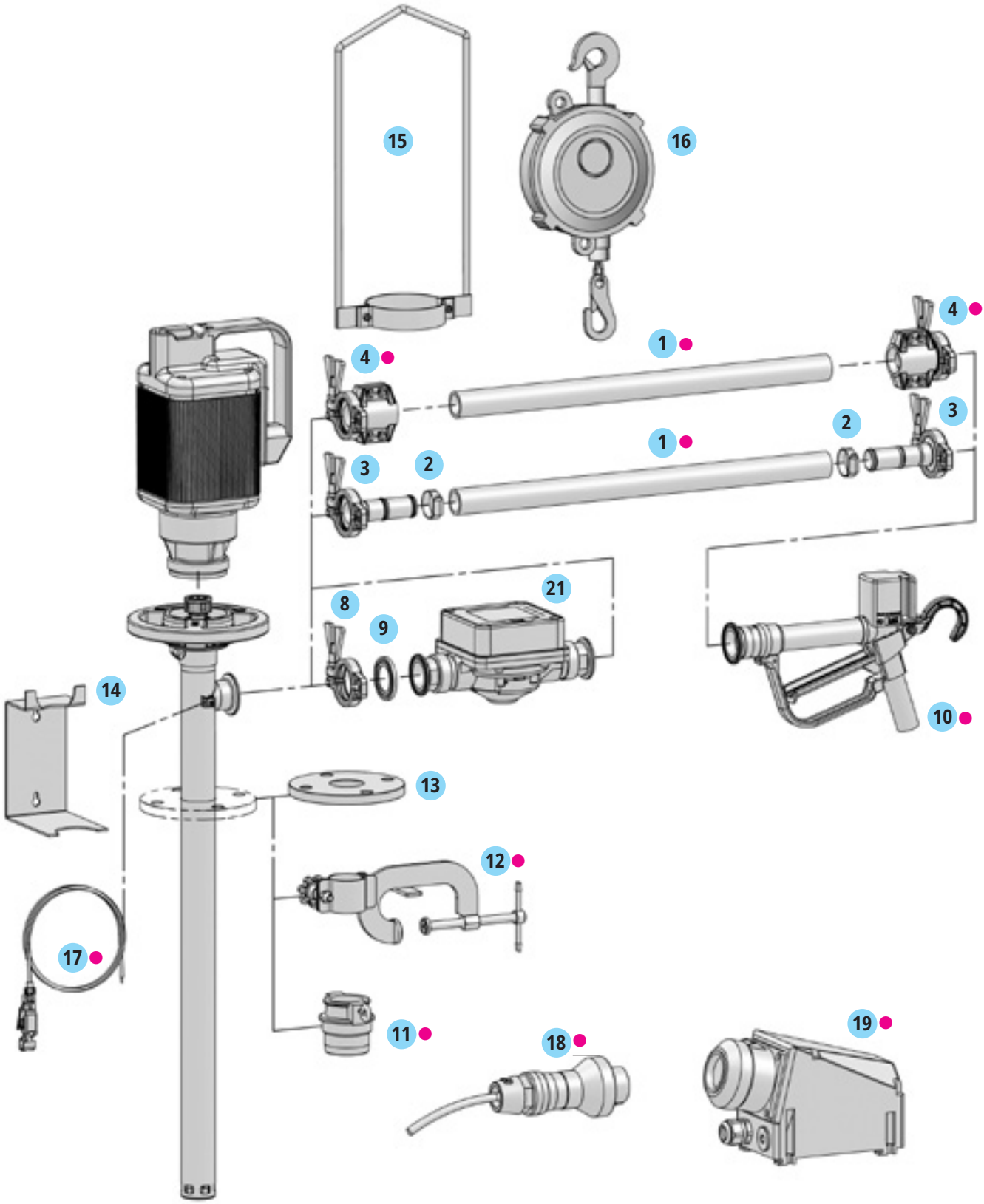

1 ●	Hose	10 ●	Nozzle	16	Balancer
2	Hose clip	11 ●	Drum adapter	17 ●	Equipotential bonding cable
3	Hose connection	12 ●	Clamping device	18 ●	Ex-plug
4 ●	Hose connector	13	Installation flange	19 ●	Ex-socket
8	Tri-Clamp locking clamp	14	Wall bracket	21	Flow meter
9	Tri-Clamp seal	15	Lifting device		

● Suitable for transferring combustible and easy flammable liquids (e.g. ethanol, petrol) or in explosive hazard area.

Specification		Order-No.	Product detail

1 PVC spiral hose, fabric reinforced

Hose for food liquids made of PVC with woven layer and imbedded galvanized steel helix, inside and outside smooth, complies with EU-regulations 10/2011 and 1935/2004.

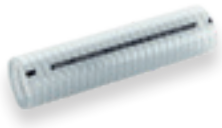

Operating pressure:	max. 14 bar	
Temperature of medium:	-5 up to +65 °C	
Nominal diameter:	Weight:	
DN 19 (3/4")	0.45 kg/m	**0374-466**
DN 25 (1")	0.67 kg/m	**0374-467**
DN 32 (1 1/4")	0.80 kg/m	**0374-468**

PVC-spiral hose

Hose for food liquids made of PVC with imbedded galvanized steel helix, inside and outside smooth, complies with EU-regulations 10/2011 and 1935/2004.

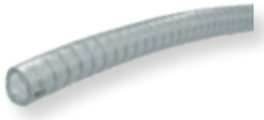

Operating pressure:	max. 5 bar	
Temperature of medium:	-5 up to +65 °C	
Nominal diameter:	Weight:	
DN 19 (3/4")	0.31 kg/m	**0374-457**
DN 25 (1")	0.51 kg/m	**0374-440**
DN 32 (1 1/4")	0.66 kg/m	**0374-441**

1 Universal chemical hose

Colour coding: "blue/white/blue".
Suitable for food and luxury foodstuffs, pharmaceuticals, cosmetics and hygiene products.
Conform to FDA and USP class VI. Complies with EU-regulations 10/2011 and 1935/2004.
Internal finish: UPE light with spiraled OHM conductive stripes UPE black, smooth, non-bleeding, abrasion-resistant.
Intermediate layer: EPDM conductive (complies with the requirements of the recommendation XXI category 2 of the BfR and FDA standards).
External finish: EPDM light grey, conductive, non-bleeding, ozone- and UV resistant, hardly flammable, (starting from DN 25 with galvanized steel helix, suitable as suction and pressure hose).
Electrically conductive Type Ω/T (<10^6 Ohm between the fittings, <10^9 Ohm through the hose wall) according to DIN EN 12115:2011.

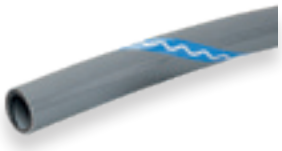

Operating pressure:	max. 16 bar	
Temperature of medium:	-30 up to +100 °C (dependant on the liquid), sterilisable at 130 °C for 30 minutes (open ends)	
Nominal diameter:	Weight:	
DN 19 (3/4")	0.6 kg/m	**0374-475** ●
DN 25 (1")	0.8 kg/m	**0374-476** ●
DN 32 (1 1/4")	0.9 kg/m	**0374-477** ●

2 Hose clips

Stainless steel hose clips with threaded screw for fixing hoses of various nominal bore at the hose connection.

Nominal diameter:	
DN 19 (3/4")	**0301-400**
DN 25 (1")	**0301-401**
DN 32 - 38 (1 1/4" - 1 1/2")	**0302-402**

Hose bracket

Hose bracket for easy attachment of loose hose ends to the drum or container.

Nominal hose diameter:	
DN 19 (3/4")	**0204-665**
DN 25 (1")	**0204-666**
DN 32 (1 1/4")	**0204-667**

● Suitable for transferring combustible and easy flammable liquids (e.g. ethanol, petrol) or in explosive hazard area.

Accessories

For PURE drum and container pumps

Product detail	Specification	Order-No.

Caution:
The assembler is responsible for the professional bonding of the hose according to the current Pressure Equipment Directive.

3 Hose connection with Tri-Clamp

For connection of the hose onto the pump, nozzle or Tri-clamp armatures (consisting of hose connector, locking clamp and seal)
Material: stainless steel (1.4404)

Connection:	for hose with nominal diameter:	Seal:	
Tri-Clamp DN 32	DN 19 (3/4")	EPDM	**0204-870**
Tri-Clamp DN 32	DN 19 (3/4")	FPM	**0204-871**
Tri-Clamp DN 32	DN 25 (1")	EPDM	**0204-872**
Tri-Clamp DN 32	DN 25 (1")	FPM	**0204-873**
Tri-Clamp DN 32	DN 32 (1 1/4")	EPDM	**0204-874**
Tri-Clamp DN 32	DN 32 (1 1/4")	FPM	**0204-875**
Tri-Clamp DN 32	DN 38 (1 1/2")	EPDM	**0204-876**
Tri-Clamp DN 32	DN 38 (1 1/2")	FPM	**0204-877**

For individual needs, e.g. for connection to on-site Tri-clamp armatures:
Tri-clamp hose connector (1.4404):

DN 32 for hose DN 19	**0370-093**
DN 32 for hose DN 25	**0370-094**
DN 32 for hose DN 32	**0370-095**
DN 32 for hose DN 38	**0370-096**

Tri-clamp locking clamp (1.4408):

DN 25/32/40	**0370-088**

Tri-Clamp seals:

DN 32. EPDM	**0314-596**
DN 32. FPM	**0314-597**
DN 40, EPDM	**0314-598**
DN 40, FPM	**0314-599**

3 Adapter fitting Tri-Clamp

DN 32 on tube fitting DIN 11851 Rd 58 x 1/6 (DIN 405)	**0172-668**

4 Hose connector with Tri-clamp

For connection of conductive hose onto the pump, nozzle or Tri-clamp armatures in explosive hazardous area. The hose connector ensures a highly conduction transition between conductive hose and pump/armature. The ohmic resistance between the armatures must be lower than 10^6 Ohm.
(Consisting of hose connector, clamp collars, locking clamp and seal).
Material: stainless steel (1.4404)

Connection:	for hose with nominal diameter:	Seal:	
Tri-Clamp DN 32	DN 19 (3/4")	EPDM	**0204-860** ●
Tri-Clamp DN 32	DN 19 (3/4")	FPM	**0204-861** ●
Tri-Clamp DN 32	DN 25 (1")	EPDM	**0204-862** ●
Tri-Clamp DN 32	DN 25 (1")	FPM	**0204-863** ●
Tri-Clamp DN 32	DN 32 (1 1/4")	EPDM	**0204-864** ●
Tri-Clamp DN 32	DN 32 (1 1/4")	FPM	**0204-865** ●
Tri-Clamp DN 40	DN 38 (1 1/2")	EPDM	**0204-866** ●
Tri-Clamp DN 40	DN 38 (1 1/2")	FPM	**0204-867** ●

For individual needs, e.g. for connection to on-site Tri-clamp armatures:
Tri-clamp hose connector (1.4404):

DN 32 for hose DN 19	**0300-174**
DN 32 for hose DN 25	**0300-175**
DN 32 for hose DN 32	**0300-176**
DN 40 for hose DN 38	**0300-177**

Clamp collar (1.4408):

DN 19	**0300-180**
DN 25	**0300-181**
DN 32	**0300-182**
DN 38	**0300-183**

Tri-Clamp locking clamp (1.4408):

DN 25/32/40	**0370-088**

Tri-Clamp Seals:

DN 32. EPDM	**0314-596**
DN 32. FPM	**0314-597**
DN 40, EPDM	**0314-598**
DN 40, FPM	**0314-599**

● Suitable for transferring combustible and easy flammable liquids (e.g. ethanol, petrol) or in explosive hazard area.

Specification	Order-No.	Product detail

10 Nozzle SS

Ideally suitable for filling and transferring liquids – also for combustible and highly flammable liquids – in food and pharmaceutical industry.
Stainless steel (1.4571) housing and valve tappet. With hoop guard, suspension hook and rotating joint.

Operating pressure:	up to 3 bar
Viscosity:	up to 760 mPas
Flow rate:	up to 50 l/min. (water)
Temperature of medium:	up to 80 °C
Weight:	approx. 1 kg
Connection:	Tri-Clamp DN 32
Seal:	FPM or EPDM

Version: PURE FPM▲	**0206-802** ●
Version: PURE EPDM▲	**0206-803** ●

11 Drum adapter in PP

For fixing the pump in the drum opening.
For pump tube Ø 41 mm, outer thread G 2 — **0208-007**

Drum adapter in PVDF

For fixing the pump in the drum opening, FDA-conform.
For pump tube Ø 41 mm, outer thread G 2 — **0208-057**

11 Drum adapter in PE (electrically conductive)

For fixing the pump in the drum opening.
For pump tube Ø 41 mm

Outer thread G 2	**0208-055** ●
Outer thread BCS 56 x 4	**0208-052** ●
Outer thread BCS 70 x 6	**0208-054** ●

12 Clamping device SS (1.4571)

To fasten the drum pumps in open-topped drums and containers.
For pump tube Ø 41 mm — **0205-040** ●

13 Installation flange SS (1.4571)

For fixing the drum and container pump according to DIN 2573, DN 50, PN 6 to a companion flange. The flange is welded onto the pump tube.
For pump tube Ø 41 mm — **0151-622**

14 Wall bracket

For safe storage of the pump when not in use. — **0204-308**

● Suitable for transferring combustible and easy flammable liquids (e.g. ethanol, petrol) or in explosive hazard area.

Accessories

For PURE drum and container pumps

Product detail	Specification	Order-No.
	15 Lifting device To simplify the process of lifting the pump in and out of drums and containers. For pumps with motors MA II and ME II For pumps with motors B4/GT	 **0211-047** **0214-196**
	16 Balancer for drum pump, with infinitely adjustable load balancer for easy lifting and moving of the pump. Load bearing capacity: 10-14 kg Tackle: 2 m	 **0371-012**
	17 Equipotential bonding cable Serves to create electrically conductive connection between explosion proof pump and container as earthing and equipontential bonding function. 2 m long with fastening clip	 **0204-994** ●
	18 Ex-plug Ensures the safe mains connection of the pump in explosive hazardous areas. CEE round plug in accordance with II 2G Ex db eb IIC T6 Gb, splash proof in compliance with IP 65. 3-pole (alternating current) system CEAG for motor ME II 3-pole (alternating current) system STAHL for motor ME II	 **0336-536** ● **0336-540** ●
	19 Ex-socket Ensures the safe mains connection of the pump in explosive hazardous areas. CEE-socket in accordance with II 2G Ex db eb IIC T6 Gb, splash proof in compliance with IP 65. 3-pole (alternating current) system CEAG for motor ME II 3-pole (alternating current) system STAHL for motor ME II	 **0336-531** ● **0336-542** ●
	21 Modular electronical flow meter system, TS series, type VA10 in PURE version For measuring of liquid foodstuffs, pharmaceuticals and cosmetics. Wide application range: directly at the drum pump, decentralized or in-line operation possible. With touch screen display, multilingual menu and simple plain text operation. Also with volume preselection. (Suitable connecting parts see items 8 and 9) For more details see separate flow meter leaflet.	
	8 Tri-Clamp locking clamp (1.4408) For fixing the flow meter VA10 PURE at the pump. (Suitable seal see item 9) DN 25/32/40	 **0370-088** ●
	9 Tri-Clamp seal For fixing the flow meter VA10 PURE at the pump. DN 32. EPDM DN 32. FPM DN 40, EPDM DN 40, FPM	 **0314-596** **0314-597** **0314-598** **0314-599**

● Suitable for transferring combustible and easy flammable liquids (e.g. ethanol, petrol) or in explosive hazard area.

For compressed air supply of motors MD1xL, MD2xL

Specification	Order No.	Product detail

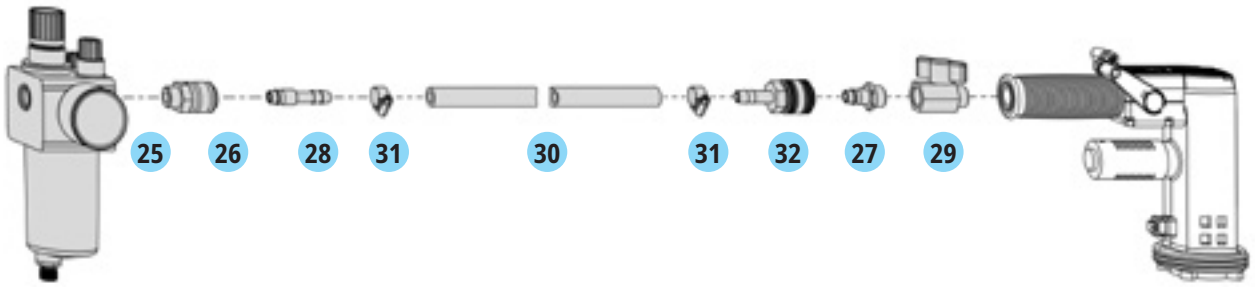

25 Maintenance unit

For cleaning and oiling the supply air.
With manometer for setting operating pressure.

Operating pressure:	max. 10 bar	**0204-152**

25 Filter pressure regulator for oil-free operation

With manometer for setting operating pressure.

Inlet pressure:	max. 16 bar	Ambient temp.:	max. 60 °C
Filter element:	5 µm, Cellpor	Diaphragms and seals:	NBR
Housing:	Zinc-Pressure cast		
	G 3/8		**5000-178**

26 Coupling (female part)

Self-disconnecting in brass. For screwing in the maintenance unit.

Brass (NW 7.2)	G 3/8 AG	**0372-154**
Brass (NW 10)	G 3/8 AG	**0372-138**

27 Nipple (male part)

Brass (NW 7.2)	G 3/8 AG	**0372-045***
Brass (NW 10)	G 3/8 AG	**0372-053**

* Sealring 0314-309 is additonally required.

28 Air hose coupling connector

For connection to a coupling.

Brass (NW 7.2)	for compressed air hose DN 9	**0372-155**
Brass (NW 10)	for compressed air hose DN 13	**0372-153**

29 Stop valve

Chromium-plated brass for regulating the compressed air as well as the speed of the compressed air motors.
G 3/8 outer thread/inner thread **0372-043**

30 Compressed air hose

PVC-hose with intermediate woven layer, DN 9, for air supply to compressed air motors.

Operating pressure:	max. 14 bar at 20 °C	DN 9	**0373-153**
	max. 10 bar at 20 °C	DN 13	**0373-154**

31 Hose clamp

(Chromated steel: 1.4016)

For compressed air hose	DN 9	**0301-156**
	DN 13	**0301-403**

32 Coupling with hose connector (female part)

Self-disconnecting in brass, with hose connector DN 9.

Brass (NW 7.2)	for compressed air hose DN 9	**0372-166**
Brass (NW 10)	for compressed air hose DN 13	**5000-165**

Accessories

Contact-free indirect measurement

Three-phase version:

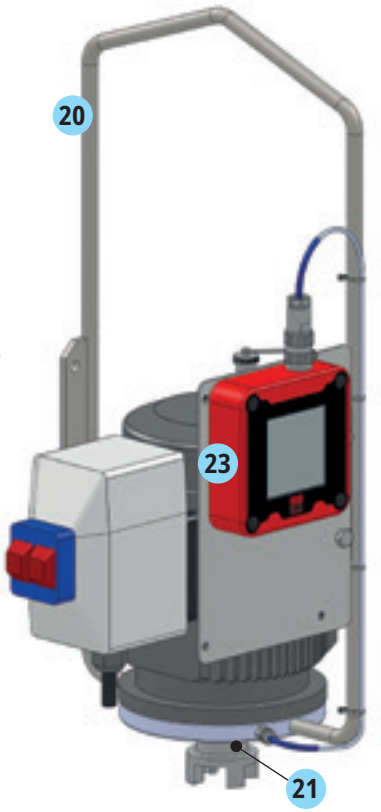

SR gear version:

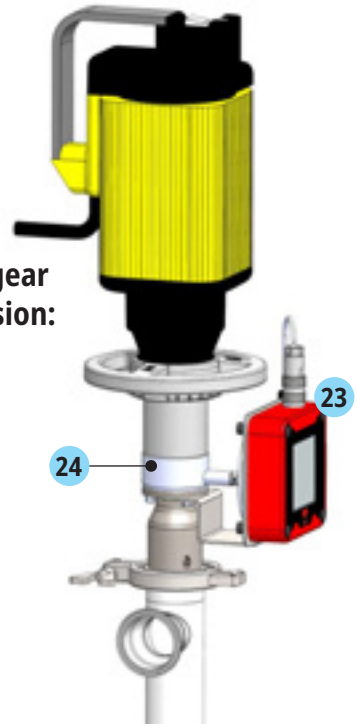

Product detail	Specification		Order No.
	For three-phase version:		
	20 Lifting device with integrated impulse sensor comprises of:		
	Impulse sensor with connecting cable and 14-wire coupling plug, lifting device and flange plate.		
	(Please order suitable impulse transmitter and control unit additionally)		
	- for three-phase motors (0172-900 und 0172-901)		**on request**
	- for all other three-phase motors and explosion proof three-phase motors Ex		**on request** ●
	- complete set for retrofitting available pumps		**on request** ●
	21 Impulse transmitter		
	Must be ordered additionally suitable for the shaft diameter of the motor.		
	For shaft diameters:	Ø 19 mm	**0172-824**
		Ø 20 mm	**0172-825**
		Ø 24 mm	**0172-826**
		Ø 25 mm	**0172-827**
		Ø 28 mm	**0172-828**
		Ø 30 mm	**0172-829**
	24 For SR gear version:		
	Impulse sensor		**on request**
	with retaining plate for operating unit		

● Suitable for transferring combustible and easy flammable liquids (e.g. ethanol, petrol) or in explosive hazard area.

Specification		Order-No.	Product detail
23 Control unit			
With touch screen display and menu-navigated operation. Is intended for evaluation of impulses and display of flow volume, battery-operated**			
Control unit BE10		**0230-000**	
Control unit Ex BE10B		**0230-010** ●	
Power supply unit NG10 230 V			
for external power supply of the operating unit 220-240 V, 50-60 Hz, II (2) G [Ex ib Gb] IIC		**0230-230**	
Power supply unit Ex-NG10m 230 V for external power supply of the operating unit with 5 m connection cable and 3-pole Ex plug (CEAG).			
220-230 V, 50-60 Hz, II 2G Ex eb mb [ib] IIC T4 Gb		**0230-240** ●	
Accessories optional			
Relay module RM30 For three-phase motors up to 1.5 kW allows the filling with pre-selection (batch function), 400 V, 1,5 kW, 50 Hz, II (2) G [Ex ib Gb] IIC		**0230-220**	
Power cable RM30 400V 400 V, 50 Hz, 5-wire, 5 m long	For RM30	**0211-388**	
Connecting cable motor RM30 400V 400 V, 50 Hz, 5-wire, 0.6 m long	For RM30	**0211-386**	
Relay module RM10 For three-phase motors with frequency converter al- lows the filling with pre-selection (batch function), 220-240 V, 50-60 Hz, II (2) G [Ex ib Gb] IIC		**0230-200**	
Power cable RM10 230V 230 V, 50 Hz, 5 m long	For RM10	**0211-155**	
Adapter cable motor RM-FU 230V/24V For three-phase motors with frequency converter 230V AC/24V DC	For RM10	**0230-323**	
Adapter bushing RM-FU 230V/24V For three-phase motors with frequency converter 230V AC/24V DC	For RM10	**0230-324**	

** Limited battery operation without power supply unit possible

● Suitable for transferring combustible and easy flammable liquids (e.g. ethanol, petrol) or in explosive hazard area.

Twice the **COMPETENCE**...

Professional Fluid Management

- Drum pump sets
- Drum and container pumps
- Eccentric screw drum pumps
- Flow meter systems
- Air operated double diaphragm pumps
- Vertical and horizontal centrifugal pumps

Lutz Pumpen GmbH
Erlenstraße 5-7 · D-97877 Wertheim · Phone: (+49 93 42) 8 79-0 · Fax: (+49 93 42) 87 94 04 · E-Mail: info@lutz-pumpen.de
www.lutz-jesco.com

...simply **UNIQUE**

A Measured Step Forward

Dosing pumps and accessories
Chlorinators
Measuring and control technology
System and process technology
Chemical centrifugal pumps
Water disinfection

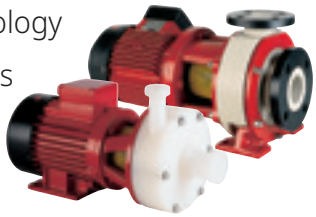

Lutz-Jesco GmbH
Am Bostelberge 19 · D-30900 Wedemark · Phone (+49 51 30) 58 02-0 · Fax (+49 51 30) 58 02 68 · E-Mail: info@lutz-jesco.com
www.lutz-jesco.com

Order No. 0699-315

State of art: 08.2025

Would you like to discover our complete portfolio?
You can find our brochures here:

Follow us on:

Lutz Pumpen GmbH
Erlenstraße 5-7 | D-97877 Wertheim | Phone +49 93 42 / 8 79-0 | info@lutz-pumpen.de | www.lutz-jesco.com/en